APPROACH IN ACHIEVING HIGH RELIABILITY FOR SATURN CLASS VEHICLES

BY
DR. EBERHARD REES

PRESENTED TO
AGARD GUIDANCE & CONTROL PANEL SYMPOSIUM ON
RELIABILITY IN AEROSPACE VEHICLE GUIDANCE
& CONTROL SYSTEMS

PARIS, FRANCE
MARCH 6-8, 1967

Approach in Achieving High Reliability for Saturn Class Vehicles with Particular Emphasis on Their Navigation, Guidance and Control System

Presented by

Eberhard Rees
Deputy Director, Technical
George C. Marshall Space Flight Center
National Aeronautics & Space Administration
Huntsville, Alabama

To

AGARD Guidance & Control Panel Symposium on
Reliability in Aerospace Vehicle Guidance
& Control Systems

Paris, France

March 6,7 and 8 1967

TABLE OF CONTENTS

I. Introduction

In the spring of 1961 the United States established the Apollo Program in continuation of the manned space flight efforts conducted by the National Aeronautics and Space Administration. The general objective of this program is to enhance the nation's capability and knowledge in manned space flight, and to increase the payload carrying capacity of launch vehicles for manned and unmanned exploration of space. The immediate goal for the Apollo is to land men on the moon and return them safely to earth in this decade.

This paper will concentrate on the launch vehicles for the Apollo Program; namely, the Saturn class vehicles with particular emphasis on the Navigation, Guidance, and Control systems (NG&C). In discussing the approach for achieving high reliability of these systems, I will focus on the Saturn V since this is the launch vehicle which is to carry the three astronauts toward the moon (Fig. 1).

The Saturn class vehicles consist of the Saturn I which has a capability of carrying approximately 11,000 kilograms (24,200 lbs.) payload into lower earth orbits, the Uprated Saturn I (Saturn IB) with approximately 17,000 kilograms (37,400 lbs.) payload capability, and the Saturn V with approximately 120,000 kilograms (264,000 lbs.) payload into lower earth orbit, approximately 43,000 kilograms (94,600 lbs.) to the moon and approximately 32,000 kilograms (70,400 lbs.) on a planetary mission. When the Apollo Program was established, the Saturn I was already under development. Based on the Saturn I approach, the other two Saturn systems were planned as an evolutionary concept. The navigation, guidance and control scheme of the system, for instance, was developed and tested on the Saturn I launch vehicle. It is also important to

note that, at the inception of the program, the decision was reached to develop a separate and independent NG&C system for the launch vehicles rather than to employ one integrated system in the spacecraft. The reasons for this decision are manifold and they should not all be mentioned here. However, in the context of this paper it should be emphasized that the acceptance of this concept was considered a major contributing factor for achieving high reliability early in the program.

Considering the overall launch vehicle program with its very complex and unprecedented technical systems, subsystems and components, its tight time schedule, the high cost per launching, its mandate for utmost crew safety, it is needless to say that the end product, the actual flight hardware, as well as the operational procedures and their execution, must nevertheless be as reliable as present day technology and management know-how will permit.

Thus, reliability considerations have been one of the most significant elements in the Saturn Program. It has been from the beginning, a notable design parameter. It has been planned and conducted as a special effort throughout the prime and subcontractor structure of the program.

I think it can be assumed that the Saturn V Launch Vehicle, as well as the design of its stages and the whole concept of how to land men on the moon as conceived in the Apollo Program, is well known. Let me, therefore, only very briefly present some characteristics of the Saturn V as the basic medium for the discussion.

II. Apollo/Saturn V Space Vehicle Description - This vehicle for the manned lunar landing consists of the Saturn V launch vehicle and the Apollo spacecraft (Figure 2). The vehicle is 110 meters (364 ft.) high and 10.1 meters (33 ft.) in diameter at the base, excluding the fins. It will weigh more than 2,800,000 kilograms (6,000,000 pounds) at lift-off.

The Apollo/Saturn V space vehicle consists of three propulsion stages - the S-IC, S-II and S-IVB - an instrument unit and the spacecraft.

The following is a short description of each of these major systems:

S-IC Stage

The S-IC stage is 42 meters (138 ft.) long and 10.1 meters (33 ft.) in diameter. The dry weight of the stage will be about 136,000 kilograms (300,000 pounds). The oxidizer and fuel tanks will hold about 1,451,500 kilograms (3.2 million pounds) of liquid oxygen and 635,000 kilograms (1.4 million pounds) of RP-1 (kerosene) respectively.

A cluster of five F-1 engines make up the propulsion system. Each engine develops 680,400 kilograms (1.5 million pounds) of thrust for an aggregate thrust of 3,402,000 kilograms (7.5 million pounds) to propel the fully assembled space vehicle.

One of the engines is rigidly mounted to the center line of the stage. The other four can be gimbaled $\pm$ 5.9 degrees to control the attitude of the stage.

S-II Stage

The S-II stage is 24.7 meters (81 ft.) long. It is the largest and most powerful stage ever built to use liquid hydrogen as fuel. Five J-2 engines of

90,720 kilograms (200,000 pounds) of thrust each consume a total of 408,233 kilograms (900,000 pounds) of liquid hydrogen and liquid oxygen to propel the stage during its six and one-half minutes of flight. Four of the stage engines have a gimbal angle of plus or minus 7 degrees for control purposes.

S-IVB Stage

The S-IVB stage is 17.6 meters (58.6 feet) long and 6.6 meters (21.6 ft.) in diameter. It has a dry weight of approximately 9,300 kilograms (20,500 pounds). A single J-2 engine with orbital restart capability is used and consumes 104,000 kgs (230,000 lbs.) of liquid oxygen and liquid hydrogen propellants throughout its two-fold mission. It is the S-IVB stage that injects the Apollo spacecraft into the escape trajectory to the moon.

Instrument Unit (IU)

The instrument unit (Fig. 3) located atop the S-IVB stage is a 1,590 kg (3500 pounds) section of three 120-degree segments of aluminum honeycomb sandwich joined to form a cylindrical ring 0.91 meters (3 ft.) high and 6.6 meters (21.6 ft.) in diameter. The unit contains guidance, control, measuring, telemetry, power, tracking, sequencing and emergency detection equipment. These equipment boxes are mounted on cold plates attached to the inner side of the cylindrical structure.

It is the equipment in the IU that performs the guidance and control functions for the Saturn launch vehicle. Here the flight information is processed to determine inflight corrections and maneuvers required to keep the vehicle on its prescribed trajectory, satisfying the planned end condition necessary to fulfill the flight mission.

The operational lifetime of the IU systems is seven hours for Saturn V. This time can be extended for longer duration missions by increasing the capacity of the power supply (batteries) and the water-methanol supply of the environmental control system.

Apollo Spacecraft

The Apollo spacecraft (Fig. 2) consists of three modules: The Command Module, the Service Module and the Lunar Module. Their combined weight is approximately 40,000 kg (87,000 pounds). A small propulsion unit known as the Launch Escape System is attached to the Command Module to thrust it clear of the launch vehicle in case the safety of the three-man crew is threatened.

The Command Module contains the necessary equipment and provisions for crew comfort and control of the spacecraft systems. It is equipped with twelve reaction control motors to provide maneuvering capability.

The Service Module contains a propulsion system having a thrust capability of approximately 10,000 kg (22,000 pounds). Attitude control and stabilization of the spacecraft are provided by sixteen reaction control motors mounted to the Service Module.

The Lunar Module is made up of two stages: the lunar descent stage and the lunar ascent stage. The descent stage has a variable thrust engine capable of being throttled from approximately 450 kg (1,000 pounds) to 4,760 kg (10,500 pounds) thrust. The ascent stage, used to leave the lunar surface, employs a single propulsion engine having a thrust of 1,600 kg (3,500 pounds).

III. Launch Vehicle Mission Description - The first mission of the Saturn V launch vehicle will be to start the Apollo spacecraft and its three-man crew on a journey to the moon. The three propulsion stages and the instrument unit are mated vertically in a Vehicle Assembly Building at Cape Kennedy. Here the launch vehicle is thoroughly checked out prior to being transported to the launching pad.

After all verifications and simulation tests have been completed, the vehicle is moved by a Crawler-Transporter to the launch site. At the launch pad final preparations, propellant loading, brief checkout and the countdown are conducted.

After lift-off, the first stage boosts the vehicle on a predetermined path through the denser portion of the atmosphere. During its two and one-half minutes of operation the S-IC stage consumes over 13,600 kgs (30,000 pounds) of propellants per second. Few seconds after lift-off a programmed roll maneuver is initiated to align the vehicle to the desired flight azimuth. Guidance is achieved through a preset time-tilt program to the control system. At the end of S-IC burn the vehicle has a velocity of 2.7 km/sec (8900 ft/sec) and an altitude of 56 km (31 nautical miles).

The S-II stage ignition occurs immediately following the separation of the first stage. During its six and one-half minutes of burn, the vehicle is taken to an altitude of about 180 km (108 nautical miles) reaching a near orbital velocity of 6.6 km/sec (21,800 ft/sec). Upon ignition of this stage, the guidance system scheme is changed from a standard time-tilt mode to a path adaptive mode. Attitude operations are accomplished by swiveling the outer four propulsion engines for roll, pitch and yaw.

The third stage (S-IVB) has two operational phases. The first gives the vehicle its final boost into earth orbit. After about two minutes when the vehicle has acquired the predetermined orbital velocity of 7.8 km/sec and an altitude of 185 km, the guidance system will command engine cutoff. The single engine is swiveled for thrust direction control in pitch and yaw. Roll control is accomplished by an auxiliary propulsion system consisting of six control nozzles body-fixed to the structure.

At the proper time during the earth parking orbit, the S-IVB is ignited once again to inject the Apollo spacecraft into a translunar trajectory. During the five-minute burn period, the velocity is increased to 10.9 km (35,900 ft.) per second to enable the vehicle to escape the earth's gravitational pull. This occurs at an altitude of approximately 300 km (167 nautical miles). Engine cutoff is given by the guidance system when the required injection conditions have been achieved. The space vehicle is then on a predetermined "free-return" trajectory to the moon. About an hour later, a transposition maneuver is executed (Fig. 4) which separates the Command Service Module from the Lunar Excursion Module, turns it around and docks it with the Lunar Excursion Module. The S-IVB/IU provides attitude stabilization for the Lunar Excursion Module during this operation. The S-IVB/IU is then separated from the Apollo spacecraft. This completes the mission of the launch vehicle.

IV. Saturn Navigation, Guidance & Control

The exercise of directing a space vehicle to execute a given mission is normally described in terms of three separate functions: navigation, guidance and control. Navigation is the determination of position and velocity of the vehicle, normally from onboard measurements, as in the case of the Saturn launch vehicle; guidance is the computation of maneuvers necessary to get from the present to a desired set of conditions; control is the execution of the maneuvers called for by guidance. A block diagram of the overall Saturn V navigation, guidance and control system is shown in Fig. 5.

The major components of the navigation, guidance and control system are the stabilized platform, the digital guidance computer, data adapter and the control computer. The stabilized platform provides a space-fixed coordinate reference for making navigation measurements and for generating attitude control signals. The digital computer determines the necessary maneuvers to achieve the desired end conditions of the vehicle trajectory. The data adapter is the input/output device for the guidance computer. It processes the many incoming signals to make them acceptable to the computer. The control computer processes the attitude correction signals from the guidance computer, thus generating the control commands for the engine actuators.

The navigation measurements are made with respect to a reference coordinate system (Navigational Coordinate System). The X_s axis is vertical through the launch site, the Z_s axis is parallel to the aiming azimuth, and the Y_s axis completes the right-handed system.

The guidance function uses the navigation information to generate vehicle attitude or attitude rate commands. Overall system performance requires that the guidance methods permit minimum propellant consumption for maneuvers and avoid excessive structural loads resulting from these maneuvers.

To prevent excessive structural loads which may be caused by guidance maneuvers while flying through the denser part of the atmosphere, open loop guidance in the form of a time-tilt program is used for the first stage flight phase. The guidance loop is closed upon ignition of the second stage. It remains active through third stage burn until insertion into parking orbit. Subsequently, it will operate until lunar transit injection through the second burn of the S-IVB stage, and for attitude control through the transposition maneuver until separation from the spacecraft.

The guidance system must correct for numerous inflight perturbations such as those stemming from wind, unsymmetrical airflow, deviations caused by nonstandard vehicle and engine characteristics and performance, control inaccuracies and emergency situations. Yet the required end conditions of the powered flight must be satisfied with a high degree of accuracy to avoid additional propellant consuming maneuvers.

A path adaptive guidance scheme is used to meet this requirement. As its name implies, this system does not constrain the vehicle to a standard trajectory but computes a new optimum path each second from the instantaneous state of the vehicle to yield the desired mission end conditions. Thus, perturbations occurring during flight are corrected in an optimum way.

A path adaptive iterative guidance mode (IGM), successfully demonstrated on Saturn I flights, has been developed for Saturn V. It is designed to accommodate a large variety of missions including earth orbits, orbital changes, lunar flights and deep space flights. The iterative guidance equations for Saturn V require more flight computer capacity than most guidance schemes optimized for minimum propellant consumption, but considerable flexibility is gained. For example, the same set of guidance command equations is applicable to almost all orbital missions and can be formulated for use with any number of high thrust stages. The small number of presettings for flight is an important characteristic of the scheme since they may be determined without resorting to time-consuming statistical methods. The accuracy and propellant economy with the scheme are excellent. This is true even under severe perturbations such as an engine failure in the first and second stage of a three-stage multi-engine vehicle.

As previously defined, the control system has the function of executing the maneuvers called for by guidance. Thus, the attitude control system must control the thrust vector, relative to the vehicle, in such a manner that the attitude errors are diminished satisfactorily. A wide operating range of the control system is used because of data variations with time and certain vehicle constraints such as structural limitations and control system stabilization limits.

For the Saturn V launch vehicle, the control requirements can be divided into attitude control during powered flight and attitude control during coast flight. Because of large side forces resulting from aerodynamic flow and pressure on the first stage during powered flight, the maneuvering capability is limited to

controlling the vehicle for a minimum angle of attack. The control system gains are changed at predetermined times to maintain an adequate dynamic response as the flight loads and forces change.

During coast flight, attitude control of the vehicle is accomplished by the S-IVB stage auxiliary propulsion system. This system generates thrust pulses of variable duration to correct for errors in pitch, yaw and roll. The same hypergolic engines (thrust nozzles) are also used for control of the roll attitude of the vehicle during powered flight and for ullage control prior to second ignition.

The Instrument Unit and each stage of the launch vehicle is equipped with a switch selector. The switch selector is used to activate proper stage circuits to execute flight sequence commands. The commands are stored in the guidance computer's memory and are issued according to the flight program. Each switch selector can activate - one at a time - 112 different circuits in its stage.

The Instrument Unit command system provides data transmission from ground stations to the IU stage. It is used to update guidance information or to command certain functions in the S-IVB/IU stage. The system is usually not employed during powered flight and serves mainly as a backup system while in orbit.

The angular direction of the thrust vector of the engines is controlled by swivelling the gimbal-mounted propulsion engines. This control is obtained by linear hydraulic servo-actuators in the pitch and yaw planes.

The four major components of the NG&C systems are shown on the following photographs:

Fig. 6 - Stabilized Platform

Fig. 7 - Digital Guidance Computer

Fig. 8 - Data Adapter

Fig. 9 - Control Computer

V. Reliability Approach

For the past few years reliability has been the focus of much attention, especially in the missile and space programs. This interest and concern did not just happen by accident. There was a significant reason for its sudden appearance and inclusion in these national programs. Designers of already complicated systems found that the demands of the future, especially those where space missions were involved, required operational times and system accuracies that seemed impossible to obtain. In many cases the state-of-the-art had to be advanced so that these requirements could be satisfied.

Reliability was transformed from just a "subject to be talked about" to a technology to be documented on paper. Reliability became a significant requirement of the design specification. It was established as a design parameter on an equal basis with "volume" and "weight" and other physical or performance criteria; in many cases it even overshadowed these parameters.

The reliability discipline must be applied in a planned and controlled manner to be effective. Just as its methods and techniques cannot be ignored, neither can they be allowed to run wild. It is necessary to first realistically define

the requirement and then to assure that the objective is met through management controls and assessment. Tradeoffs have to be made sometimes where necessary to achieve the reliability objective in a reasonable and technically accepted manner.

One of the major problems that reliability as a discipline has faced is the difficulty in clearly specifying the operations necessary to establish realistic reliability requirements, to achieve the desired improvements and to adequately measure the end results. Quite often we are limited to a technique of making comparisons between two parts, components or systems to obtain a numerical value of reliability. More sophisticated techniques have also been developed for measuring the relative reliability of the system and for obtaining an indication of an absolute quantitative reliability value.

As noted earlier, the Saturn launch vehicle system is quite complex. The extended mission duration, execution of precision maneuvers, critical sequencing of events and severe environmental requirements demand both an operational and a reliability capability which is beyond any which has been previously contemplated. Crew safety is a must and cannot be compromised.

The normal simplified approach applied during the design phase to obtain reliability is to reduce the system concept to its simplest functional form. A reliability analysis using the product rule is performed to obtain the system predicted reliability. If the predicted reliability is lower than the goal, use of redundancies are then considered. When the reliability prediction is satisfactory, the system is developed using the best or most reliable parts. The developed

system is then tested to demonstrate if the reliability goals have been achieved. Note: It must be stressed that reliability is designed into the system in the design phase and proven in the operational phase. Where results of testing indicate inadequacies in either performance or demonstrated reliability, further changes are of course made. At this time the additional use of redundancies are considered and analyzed to determine whether a redundant component or subsystem would provide an improvement. The use of redundant items must always be balanced against the unavailable increase in weight, complexity, and also the decrease due to complexity in reliability in certain modes of operation. Extensive testing of the assembled item is performed to demonstrate the ability of the end item. These standard methods which have proven to be logical and rewarding are performed on all major programs.

As expressed in the introductory remarks of this paper, the development of the Saturn V launch vehicle was preceded by the development and launch of the highly successful Saturn I and the Uprated Saturn. This invaluable background has enabled the Saturn V program to take advantage of a significant number of subsystems and components which matured during these earlier developments as a result of thorough and consistent reliability efforts. This maturity particularly applies to the S-IVB stage which will have been flown at least four times as a second stage on the Uprated Saturn I prior to the first Saturn V launching. This qualification by similarity also applies to the hydrogen-oxygen engine, the J-2 engine and to the Instrument Unit. I emphasize the importance

of this qualification concept here again because, from a monetary point of view alone, the program cannot afford more than two or three unmanned flights of the Saturn V prior to the first manned flight. Since the reliability of the Saturn V must have reached the planned reliability goal prior to the first manned flight, maximum use of the design, operational and qualification experience must be made with Saturn I and its uprated version.

In furtherance of the elementary reliability requirement, the Saturn V navigation, guidance and control system hardware has been conservatively designed and the emphasis has been placed on simplicity. Flight proven components and techniques are employed to the maximum extent possible. Yet, the electronic portion of the system is considered extremely complex because it is comprised of millions of single parts such as diodes, transistors, resistors, capacitors, relays, connectors, etc.

The NASA has made significant progress in developing high reliability specifications for all primary parts and components in the electrical/electronic systems. These were started in 1962. Emphasis was given to tightening critical performance parameters in the direction of most efficient utilization. Inspections and testing during production were stipulated. Line yield and parameter variance under burn-in and life testing were determining factors in acceptance of units. Standardization of these devices across the many systems and subsystems had a significant impact on reducing random failures while increasing the operational life of the hardware. Also, the application of these high reliability units increased the environmental tolerances of system operations.

New and improved standards were generated to govern the manufacturing processes. With the many thousands of parts used, one faulty weld or solder joint could be detrimental to the mission. Tighter inspection requirements with better and more uniform methods were developed and perfected. Consistency in workmanship and inspection became important goals. Special tools and techniques were evolved to cope with the problems of producing and using integrated and other microelectronic circuits. Failure reporting of discrepancies during assembly, test and use became an accepted criteria. All failures were analyzed (where possible) to explain the cause to the end that corrective action could be taken.

In those cases where the aforementioned efforts and actions fell short of achieving the high demand for reliability in the Saturn system, it became necessary to resort to redundant applications wherever feasible. As an example, the Instrument Unit for the Saturn V lunar mission has an apportioned reliability goal of 0.992 derived through the apportionment of the launch vehicle goal of .85. This goal is applicable for that time involving all prelaunch checkouts and a flight time of 6.8 hours. An analysis shows that a simplex, i.e., a non-redundant version of the functionally important subsystems, would yield a design reliability of but approximately 0.98 despite such reliability advantages as using high reliability parts, conservative design practices, extensive testing, decoupling, etc. The applications of various redundancy schemes to elements of the system has increased the reliability to the extent that it is commensurate with the goal. Specific redundancy techniques and their application will be discussed later in more detail in the next chapter.

An Emergency Detection System (EDS) is employed to detect malfunctions in the launch vehicle which could lead to explosions, breakup of the vehicle due to aerodynamic forces, premature cutoff of engines beyond the tolerated engine-out capability of the various stages, etc. Should such a condition develop suddenly (for instance, explosion or slowly dangerous rate of increase in angle of attack), it is the function of the EDS to insure crew safety by aborting the flight automatically or by providing the astronauts warning in time to permit manual abort. The system is designed to sense the effects of a malfunction rather than the malfunction itself. This allows for a minimum number of sensors in the system and reduces the potential for a system failure that could cause the termination of an otherwise successful flight. All automatic abort parameters have triple redundant sensors and majority voting logic. Sensors for manual abort parameters are duplexed.

As noted above, the guidance, control and sequencing has a probability of 0.992 for accomplishing the translunar injection of the Apollo spacecraft. The addition of the EDS to the launch vehicle system is expected to increase the probability of not injuring the crew to 0.9999 in the event of a launch vehicle failure.

Testing is, of course, another mandatory requirement that has been extensively applied to the Saturn program. It begins with the qualification of the piece parts and ends with an acceptance test of a completed stage or Instrument Unit. The policy of full qualification of all parts, components, subsystems and systems

under the proper environmental conditions has been followed throughout the development process. For those items having a function critical to the success of the mission, additional verification is required in the form of a reliability demonstration test.

Test parameters and test levels have been thoroughly studied to assure that the criteria specified for the various test programs represent as closely as possible the realistic mission profiles.

VI. Redundancy and How it is Used

As mentioned before, the reliability goal for the navigation, guidance and control system is .992. This admittedly high goal became necessary due to the demands of man-rated missions, the extended period of operation required, the high cost per launching of such large space vehicles, and other factors. Although much has been accomplished over the past few years in improving the design reliability of parts and components, advances in the subsystems and systems area have not kept pace. Today's systems, with a mounting increase in the number of individual parts and components and with rigid packaging requirements, are becoming increasingly complex. Exposed to the environmental conditions during a lunar mission, they would hardly meet above reliability goal. Therefore, failure mode and effects analysis, reliability analysis prediction and criticality studies have been applied extensively with the result of employing redundancy on a very large scale on the Instrument Unit of the Saturn V launch vehicle. This main feature in component, subsystem and system design which seems to make this reliability goal possible as present flight results indicate, will be discussed in some detail.

The Saturn V guidance and control system represents one of the most extensive applications of redundancy which, to my knowledge, exists in any flight system. Redundancy in various forms is applied to critical components and subsystems. The forms employed are: duplex, triple modular (TMR), prime-reference-standby (PRS), multiple parallel element (MPE), and quad redundancy.

The duplex arrangement is the simplest and lowest level of redundancy. It is used normally to duplicate the component to prevent system failure in the presence of a short or open failure mode. If the tendency to fail is in the shorted mode, the duplicate component is added in series. For a predominantly open failure mode the component is added in parallel. This arrangement is symbolically shown in Fig. 10. Assuming identical units, the reliability may be expressed as $P_D = 2R - R^2$.

Duplex

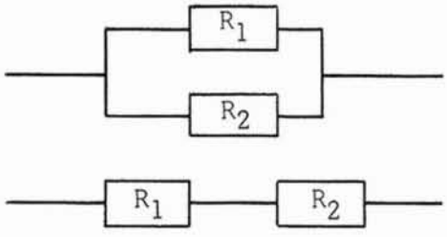

Figure 10

The duplex arrangement is also employed at the module and subsystem level, where single predominant failure modes cannot be assumed to exist. A decision element must be added to determine which channel is operating correctly.

Fig. 11 shows such an arrangement. It is one of the most desirable forms of redundancy, both in terms of simplicity and reliability improvement. The reliability of this redundant arrangement can be expressed as $P_{D_v} = R^2 + 2(R-R^2)Rv$ assuming identical components and Rv is the decision element reliability. If the reliability of the decision element is assumed to be one, the equation reduces to that for the series or parallel case.

Duplex with Decision Element

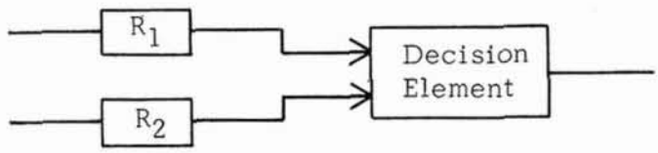

Figure 11

The triple modular redundant (TMR) arrangement is an extension of the duplex method with a decision element, or voter, that reacts to the majority inputs. Figure 12 shows the TMR arrangement. Assuming identical components and a decision element reliability of one, the redundant reliability can be expressed as $P_{TMR} = 3R^2 - 2R^3$.

Triple Modular Redundant (TMR)

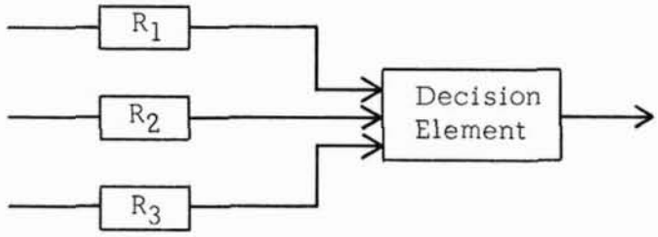

Figure 12

A principle disadvantage of the TMR method is that only one failure can be tolerated and the scheme still function properly. However, in digital applications this disadvantage is offset by the possibility of failures in opposite directions cancelling. In digital circuits there is no reason to suspect a failure in any particular state to be more prevalent than in the other state. Therefore, the reliability of a TMR redundant system when failures in opposite directions are considered can be expressed as $P^{*}_{TMR} = 1/2(3R-R^3)$. The effects of all single component part failures are negated by this scheme and significant reliability enhancement results.

Another redundancy form utilized in the Saturn V is the primary-reference-standby scheme (sometimes referred to as pair and spare redundancy) shown in Fig. 13. This method is used mainly in analog circuits. It employs three input channels serving three separate functions. The three channels are the primary or command channel, the reference channel and the standby or spare channel. During normal operation the primary channel furnishes the functional output. Should a difference or disagreement by beyond an established level between the primary and reference channels, the comparator substitutes the standby channel as the functional output. Again assuming identical units and a comparator reliability of one, the redundant reliability can be expressed as $P_{PRS} = R(1 + R-R^2)$.

Prime-Reference-Standby (PRS)

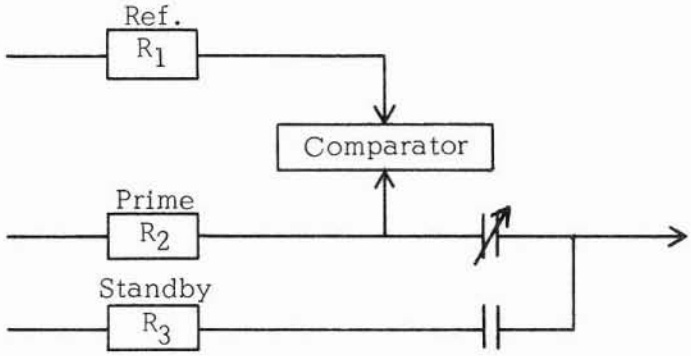

Figure 13

The PRS redundancy form has one major disadvantage in that it is more susceptible to transients or intermittents than the other schemes. If the comparator switches to the standby channel due to a nonfailure, such as a transient in the reference or primary channel, it is desirable to have means available to switch back to the primary channel so as to reestablish the redundancy capability. Switchback techniques are being employed in selected PRS applications within the system.

The next redundancy form used is the quad arrangement as shown in Fig. 14. Only one failure in each or one in both branches is permissible for this scheme to work. It is most useful when applied to parts or components where there is no single predominant failure mode. Assuming identical units, the redundant reliability is expressed by $P_O = R^2 (4 - 4R + R^2)$. In applications where a single failure mode possibility exists, duplex redundancy would be employed in preference to the quad arrangement.

Quad Redundant

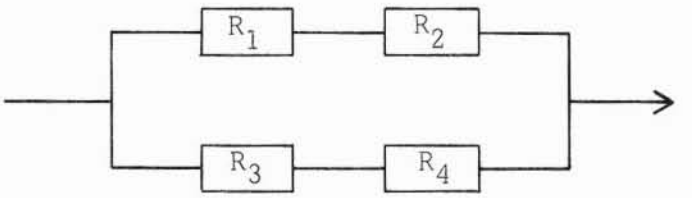

Figure 14

The final redundancy form employed is the multiple parallel element (MPE). This scheme depends on inherent redundancy within the system. In other words, there may be multiple functions, the failure of which one or more would not cause

a system failure. Thus the system can be treated as one having four parallel elements with the failure of any one element permissible. This arrangement is presented in Fig. 15. Assuming identical units, the reliability can be expressed by $P_{MPE} = 4R^3 - 3R^4$.

Multiple Parallel Element (MPE)

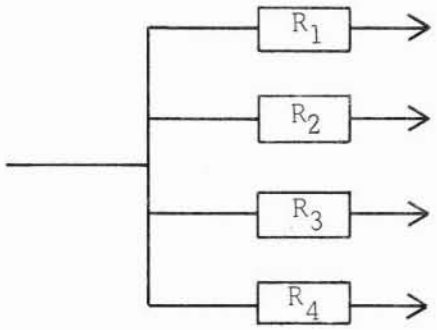

Figure 15

To summarize, Table 1 lists the redundancy schemes by preference and the corresponding reliability expression for each. However, practical limitations often affect the choice of schemes.

TABLE 1

SCHEME	RELIABILITY EXPRESSION	REMARKS
Duplex (D)	$2R - R^2$	Use proper decision element
Triple Modular Redundance (TMR)	$1/2\ (3R - R^3)$	Failures in opposite direction can cancel.
Prime - Reference Standby (PRS)	$R\ (1 + R - R^2)$	Nonfailure can cause switching (red. lost)
Quad (Q)	$R^2\ (4 - 4R + R^2)$	Limited to parts ans components primarily
Multiple Parallel Elements (MPE)	$4R^3 - 3R^4$	Four parallel elements

As mentioned earlier, the basic elements of the Saturn navigation, guidance and control system are shown in Fig. 5. The same system block diagram is repeated in Fig. 16, this time to indicate the primary type of redundancy employed in each element. It should be noted that each element in this diagram can be subdivided further to "black box" and component levels where redundancy is also used. A tabulation of the redundancy used in each element is shown in Table 2. No attempt will be made to describe in detail the total application of redundancy within the system. Instead, a few examples will be cited to show the application of each redundancy technique.

TABLE 2
TABULATION OF REDUNDANCY APPLICATIONS

System	Simplex	Duplex	TMR	PRS	MPE	Quad
Stabilized Platform						
1. Multipliers, counters and serializers		x				
2. Subtract and limit check circuits			x			
3. Accelerometers	x					
LVDC						
1. Oscillators	x					
2. Memory		x				
3. Logic and timing			x			
LVDA						
1. Power supply		x				
2. DIA converters				x		
3. Logic			x			
Control Computer						
1. Rate gyros and demodulators			x			
2. Comparators				x		

The onboard digital computer system for Saturn V consists of the launch vehicle digital computer (LVDC) and the launch vehicle data adapter (LVDA). The LVDC is the basic computing element and the LVDA serves as an input/output processing unit for the computer.

This complex system contains more than 95,000 equivalent electronic parts and components. However, less than one-half of one percent of this number are employed in such a manner that a single part failure would result in a system failure. Fig. 17 is a simplified diagram of the LVDC showing the redundancy techniques used. A single oscillator in simplex is used as it is simple in design and contains only five electronic parts. The timing and logic portion of the computer have been made triple modular redundant (TMR). The circuit has been oversimplified in the diagram as 405 voters vote on approximately 155 signals within the LVDC timing and logic circuitry.

The computer's memory section, up to eight memory modules, is employed either in duplex or simplex depending on the criticality of the program being run. Normally prelaunch programs are simplex while flight routines are duplex.

The launch vehicle data adapter (LVDA) utilizes duplex, TMR, PRS, and system backup redundancy techniques. Fig. 18 shows a typical power supply in the LVDA (there are six) operating in duplex. The DC to DC converters are tied together through isolation diodes. If a converter fails low, the other assumes the load. Should the converter try to fail high, the feedback amplifiers, operating also in duplex, would prevent this from occurring in order to maintain the isolation.

As a means of evaluating the benefits gained by using redundancy, the unreliabilities of a simplex and a redundant computer system have been calculated. Table 3 shows the comparison for the Saturn V LVDC/LVDA computer system. The figure indicates the number of failures in one million launchings.

TABLE 3
SUMMARY OF UNRELIABILITY OF
SIMPLEX AND REDUNDANT LVDC AND LVDA

Element	Simplex Unreliability U_s	Redundant Unreliability U_r	$\frac{U_s}{U_r}$
LVDC			
Logic	2,500	10	250
Memory (8mm duplex)	5,960	226	26.4
Oscillator	16	16	1
Total LVDC	8,476	252	33.6
LVDA			
Power Supply	792	10	79.2
Input/Output	800	10	80.0
Logic	2,430	10	243
Total LVDA	4,022	30	134
TOTAL COMPUTER SYSTEM	12,498	282	44.3

In the control system area, redundancy is again employed by extensively using prime-reference-standby (PRS), multiple parallel elements, and quad redundancy. Rate sensing utilizes PRS as indicated for a single channel in Fig. 19. Because these signals are analog, no switchback capability is incorporated into these PRS applications.

A layout of the control system of a Saturn V multi-engine first or second stage is shown in Fig. 20. There are six inputs to the control computer, consisting of an attitude and attitude rate for each of the three axes - pitch,

yaw and roll. Note that the elements up to the servo amplifiers are in simplex. The simplex approach was chosen for two reasons. First, the flight time is relatively short for either of the first two stages and second, the system would have become excessively complex in light of its mission requirements. It may be observed that the servoamplifiers and actuators are of the multiple parallel element arrangement previously discussed. For either the S-IC stage or the S-II stage, a single failure in the servoamplifier or actuator would not cause a system failure during flight. The control system would compensate for the loss or misalignment of a single control engine on either stage. The reliability benefits derived through redundancy for the total control system are tabulated in Table 4.

TABLE 4
SUMMARY OF UNRELIABILITY OF SIMPLEX AND REDUNDANT CONTROL SYSTEM

	U_s	U_r	U_s/U_r
p/y/r attitude rate sensing subsystem	4,972	20	248
S-IC pitch/yaw/roll subsystem	10,760	250	43.1
S-II pitch/yaw/roll subsystem	13,254	283	46.8
S-IVB pitch-yaw propelled phase subsystem	10,249	9,565	1.07
S-IVB Auxiliary attitude control subsystem	17,724	657	27
Total control system	56,959	10,775	5.3

The stabilized platform system provides the space-direction-fixed coordinate reference frame from which the vehicle's attitude is determined. Because of the obvious problems involved in providing redundant stabilizing gyros and other

stabilizer elements, the platform cannot utilize the extensive redundancy employed in other parts of the guidance and control system. The guidance system of the spacecraft is, therefore, used as a backup to the launch vehicle guidance system during the orbital and translunar phases.

In addition to this backup, redundancy has been incorporated into selected critical areas of the platform where it was feasible. Duplex is applied to portions of the circuitry of the power supply package, to the optical incremental encoders on the accelerometer and to the multispeed analog resolvers on the gimbal pivots.

Table 5 shows the gains made through redundancy for the three principal systems. Although the digital system, which is almost totally redundant, has a much lower unreliability than the other two systems, significant improvements have been made in all three systems through redundancy.

TABLE 5
SUMMARY OF UNRELIABILITY OF SIMPLEX AND REDUNDANT GUIDANCE AND CONTROL SYSTEM

	U_s	U_r	U_s/U_r
Stabilized Platform System*	15,408	8,669	1.77
Digital Computer System	12,498	282	44.3
Control System	56,959	10,775	5.3
Total	84,865	19,726	4.3

*U_r includes considerations of backup out of orbit, while U_s refers to a totally simplex system (no subsystem redundancy and no backup).

In the stabilized platform and control systems the unreliability remains high compared to the digital system because each contains major simplex electro-mechanical elements. However, compared to other major systems in the launch vehicle where little or no redundancy could possibly be incorporated, the systems look quite favorable. Currently the overall guidance and control system reliability is considered acceptable for the Apollo mission. The continuing investigations of backup schemes and design modifications previously mentioned represent efforts designed to enhance the reliability.

VII. Systems Design Analysis

There are numerous methods by which the configuration of an end item may be evaluated to determine if it will fulfill its intended purpose. One such method employed on the Saturn launch vehicle has been a systems design analysis. The purpose of this analysis is to determine the possible modes of failure of a given component or subsystem, its effect on the subsystem, stage, vehicle and/or mission and the degree to which this failure type compares in criticality (severity) with other possible failure types.

Detailed procedures have been developed and are being used in the generation of failure mode and effect analyses (FMEA), component failure mode frequency ratios, effect of the failure mode on the vehicle and the mission, critical items list and criticality ranking of all components in the system.[10]

The FMEA provides identification of all components, a description of the function of each and all modes of failure for each component. An analysis of these failure modes is made to reflect failure effects on the subsystem, stage and

vehicle/mission. Assuming the occurrence of such failures, an analytical or engineering judgment of the probability of loss is made and categorized as follows:

Actual Loss	100% Probability
Probable Loss	10 to 100% Probability
Possible Loss	0 to 10% Probability
None	0%

Equally as important as the failure effect itself is the time a failure is most likely to occur, such as during the launch countdown, boost flight or orbit. One other vital bit of data is also obtained - the reaction time from a component failure to loss of vehicle. This type of information is important in determining crew abort procedures and success probability. Additionally, this information is of value for compiling the critical items list and ranking which, based upon the analysis, serves as a tool for evaluating comparable components, for a basis for test planning and for a convenient management index of "soft spots" in the system.

The criticality determination provides the necessary factors to compute criticality numbers for each single failure point (critical component). The Criticality Number (CN) is defined as:

> The number of losses (crew, mission or vehicle) in a million preflight or flight attempts, as applicable, attributed to a failure of a given component in a specific mode and environmental condition during a given period of operation. It is expressed by the equation:

$$CR = \beta \alpha \bar{R} \times 10^6$$

Where:

CR = The criticality number for a component failure in a given failure mode during a given time period.

α = The failure mode ration of a given failure mode.

β = The loss probability assuming a component failure in a given failure mode during a given time period.

$\bar{R}$ = The probability of component failure during a given time period.

Fig. 21 presents total criticalities for the Saturn V vehicle and associated stages. The reliability totals R_L (vehicle, crew or mission loss reliabilities) for the stages and Saturn V launch vehicle are the probabilities of successfully completing all of the stated objectives. The totals are broken down into three groups: Category I (hardware, failure of which results in loss of life of any crew member), Category II (hardware, failure of vehicle results in abort of mission but does not cause loss of life) and "Prelaunch Vehicle Loss Only," resulting in a Total Reliability and Criticality Number. Category I figures apply to the time interval from crew on board to S-IVB/IU separation from the payload. Category I criticality during the prelaunch phase is 288 and 8,753 during the flight phase. Category II figures apply to the time interval from T-1 day to S-IVB/IU separation from the payload. The "Prelaunch Vehicle Loss Only" figures apply to the time interval from T-1 day to liftoff (T=0). Category I, Category II and "Prelaunch Vehicle Loss Only" Criticality are exclusive of one another and are summed to obtain the total criticality value for each stage and the Saturn V vehicle.

The Saturn V vehicle reliabilities R_L for Category I, Category II and "Prelaunch Vehicle Loss Only" are the product of the individual stage reliabilities R_L. Criticalities CR for the Saturn V vehicle are $(1 - R_L) \times 10^6$.

VIII. Test Programs

The official Apollo Test Requirements Document [5] states that "a test program is a key factor in assuring the successful accomplishment of the Apollo mission. The overall test program will be designed to yield the maximum amount of correlated data for use in establishing the highest possible degree of engineering confidence in the performance of space vehicle and associated ground equipment." The test type categories are defined as:

1. Ground Tests
    a. Development tests
    b. Acceptance Tests
    c. Checkout of GSE
    d. Pre-launch Checkout
    e. Qualification Tests
    f. Reliability Demonstration Tests
    g. Post-Flight Tests
2. Flight Tests (Manned & unmanned)
    a. Flight Development Test
    b. Flight Verification Test

The above test types are applicable to parts, components, subsystems, systems, stages and launch vehicles. NASA has consistently followed the policy of insuring that each level of assembly satisfies all environmental and functional requirements prior to incorporation into the next higher level of assembly. The process begins with the individual parts used in the design. A continuing program has been conducted to select, qualify, procure, screen, accept and store basic electrical and electronic parts and components in accordance with a preferred parts and materials list. Maintenance of this list, the applicable procurement specifications and qualified products list assists in insuring the reliability of the products.

At the subsystem and systems level, test requirements for qualification and other applicable test types are either specified in the procurement contract or provisions are added requiring the contractor to generate the test plan for NASA approval. The test criteria are fundamental during the development, evaluation and acceptance of the final hardware.

Stages also are tested and accepted against a test specification just as a launch vehicle is checked out completely at the launch site to make certain that all of the systems are functional and in a flightworthy state. Years of experience have proven that maximum assurance can be obtained by conducting a progressive test program concurrent with the buildup of the elements of the total system. In this manner the test parameters are always moving toward the system's requirements. Troubleshooting back to component or "black box" level can always be accomplished without degradation to the system.

Due to the complexity of the total system and the accuracy to which it must be operating at the time of launch, automatic checkout is employed to the maximum extent.

Automation of launch vehicle checkout is used to accomplish the following:

a. Minimum test schedule time

b. Maximum reliability

c. Minimum operational manpower

d. Minimum of special equipment required

e. Minimum human error

The automation program consists of many separate programs or routines prepared to check out specific portions of the system. Each program is verified beforehand on a breadboard facility to verify routines and check the accuracy and adequacy of each specific test. Another advantage offered by the automatic programs is the ability to check out portions or isolated equipment independent of the total functioning system.

Hardware evaluation does not always end with final qualification. Certain of the onboard equipments are subjected to a reliability demonstration test because their functions are critical to mission success, for instance hardware items involved in the Emergency Detection System (EDS) whose function is so vital to the safety of the crew. The results of the EDS test program must be reviewed and accepted by a Crew Safety Panel before the system can be flown in closed loop. Normally the reliability demonstration test is an extension of the qualification test program to the same or a higher environmental requirement for some extended period of time.

It is not always a simple task to simulate some conditions on the ground. Therefore, special inflight tests have been conducted suah as an engine-out (failure) during flight. This type of testing can be conducted without degradation to the vehicle or success of the mission. Maximum confidence is thus assured when actual conditions prevail.

IX. Flight Results

In previous chapters many reliability numbers have been shown and the question will naturally be asked, "How real are these many 9's after the comma?" "Can they realistically be proven by any kind of reliability test program or by the results of a flight test program?" The answer, of course, is "No." Such test efforts would exceed any possible amount of money which could be made available for any program. However, specific statements about mission success of each flight of a launch vehicle can be made, based on the data of a well planned and executed measuring program. They will not statistically prove the design reliability but will establish a certain confidence in a system and its components.

The Saturn I flight test program included ten flights, launched between October 1961 and July 1965. All ten flights were successful, both in achieving all major test missions and in obtaining an unprecedented volume of component, as well as system, performance data for analysis and application to future design principles on the Uprated Saturn and the Saturn V.

The Saturn I proved the cluster design of the engines and tanks, the carrier capability of two large live stages, the navigation, guidance, control and other onboard systems, vehicle structures, and the vehicle launch facility compatibility with its automatic checkout scheme, etc. In addition, engine-out capability was

proven, actual flight environmental conditions and vehicle dynamics established, and a number of unpredicted deviations were detected.

For instance, on the fourth flight, an inboard engine of the first stage was intentionally cut off early by using a preset timer to demonstrate the designed "engine-out" capability or, in other words, to verify booster reliability after failure in a major system. All objectives were achieved. On the sixth flight, an inboard engine was lost due to a turbopump failure. At first stage cutoff, this caused large trajectory deviations that the guidance system had to overcome in order to achieve orbit insertion. The mission was accomplished with the second stage cutoff being initiated by the guidance system very near the prescribed velocity and within the expected accuracies of the system. An altitude versus time plot is shown in Fig. 22. Following are some data on this flight indicating the cutoff conditions:

	Actual	Difference Between Actual and Planned
First stage cutoff		
Velocity	2553 m/sec.	- 99 m/sec
Flight time	149.23 sec.	+ 2.99 sec.
Second Stage cutoff		
Velocity (Earth fixed)	7408 m/sec.	+ 6.50 m/sec.
Flight time	624.86 sec.	- 1.07 sec.
Orbit		
Apogee Altitude	234.53 km	+ 9.42 km
Perigee "	178.13 km	+ 1.05 km
Period	88.62 min.	+ 0.10 min.

As could be expected in such a development program, there were problems which required corrective action. Some of these were propellant sloshing, strong bending oscillations, orbital attitude perturbations, aerodynamic roll moment, platform alignment after stage ignition, and component failures. None of these were of a magnitude to seriously affect the flight or the mission. Typical corrective actions included the adding of baffles to propellant tanks, changing control system gains, relocating vehicle vents, redesigning certain components and changing shock mounting, changing the sequence and time for some vehicle events, etc. As to the navigation, guidance and control system, it can be stated that in all Saturn I flights no malfunction was detected and all components and subsystems performed as planned. We definitely believe that this success is to a great part a result of our design concept and our reliability effort.

The Saturn I vehicles carried more inflight measuring instrumentation than was used on previous vehicles to minimize the number of expensive developmental test flights. In this flight measuring program, some 1200 measurements per flight were telemetered to ground receiving stations. Of the total, only about 3% were entirely or partially lost during flight.

The three flights of the Uprated Saturn I were equally successful. This can be attributed to the "building block" concept applied in the Saturn program, where major milestones are accomplished before proceeding to the next. Again, the various vehicle systems are being proven, with added emphasis placed on operations while in space. These activities will have added significance in the moon landing program using the Saturn V launch vehicle.

Already, considerable data and experience has been obtained covering launch preparations through orbital operations. Even though basic concepts have been confirmed, improvements are still being incorporated to enhance the performance and safety of mission operations.

For the Saturn V Program, we feel that the concepts that have been developed and applied in the Saturn program are valid and consistent with engineering judgment and present day technology. Even though all the problems associated with a task of this magnitude and complexity have not been completely resolved, our confidence in mission success is ever increasing. The test data for both ground and flight are extremely encouraging

BIBLIOGRAPHY

1. Haeussermann, W., and R. C. Duncan: "Status of Guidance and Control Methods, Instrumentation, and Techniques as Applied in the Apollo Project," presented at the lecture series on Orbit Optimization and Advanced Guidance Instrumentation, AGARD, NATO, Duesseldorf, Germany, October 21-22, 1964.

2. Rees, E.: "MSFC Approach in Achieving High Reliability of the Saturn Class Vehicles," presented at the Fourth Annual Reliability & Maintainability Conference, Los Angeles, California, July 28-30, 1965.

3. Haeussermann, W.: "Guidance and Control of Saturn Launch Vehicles," presented to AIAA Second Annual Meeting, AIAA paper No. 65-304, San Francisco, California, July 26-29, 1965.

4. von Braun, W.: "Apollo Manned Space Flight Program" presented to XVI International Astronautical Congress, Athens, Greece, September 12-18, 1965.

5. NASA, NPC 500-10, "Apollo Test Requirements," May 1964.

6. Moore, F. B., and J. B. White: "Saturn V Guidance and Control System Reliability with Emphasis on Redundancy," Internal paper, Marshall Space Flight Center, Huntsville, Alabama.

7. Astrionics System Handbook, Marshall Space Flight Center, Huntsville, Alabama.

8. Lovingood, J. A., and E. D. Geissler: "Saturn Flight-Control Systems," Astronautics and Aeronautics, May 1966.

9. NASA, NPC 200-1, Quality Assurance Provisions for Government Agencies
   NASA, NPC 200-2, Quality Program Provisions for Space System Contractors
   NASA, NPC 200-3, Inspection System Provisions for Suppliers of Space Materials, Parts, Components and Services.

10. NASA, NPC 250-1, Reliability Program Provisions for Space System Contractors.

ILLUSTRATIONS

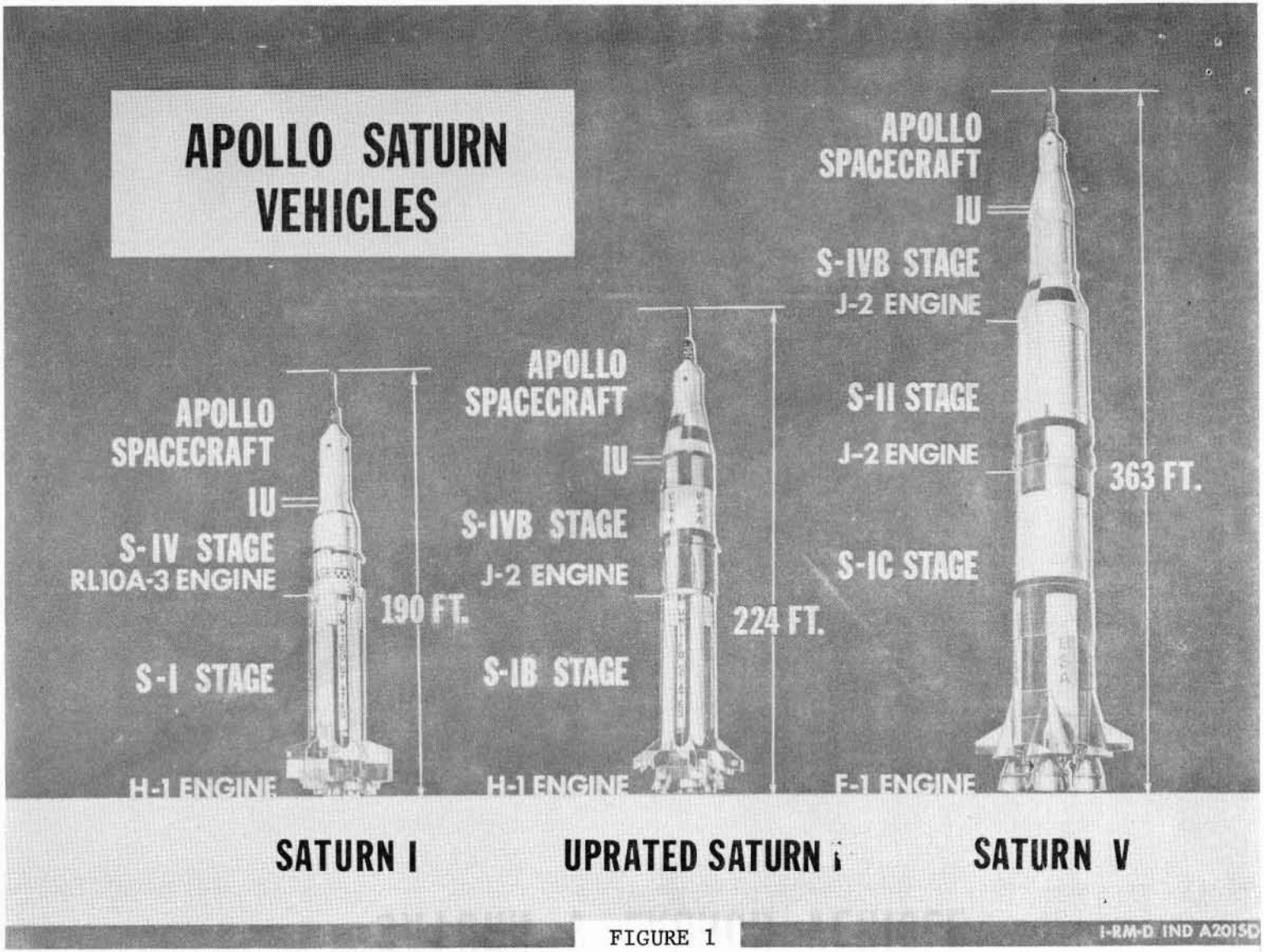
APOLLO SATURN VEHICLES
APOLLO SPACECRAFT
IU
S-IV STAGE
RL10A-3 ENGINE
190 FT.
S-I STAGE
H-1 ENGINE
APOLLO SPACECRAFT
IU
S-IVB STAGE
J-2 ENGINE
224 FT.
S-IB STAGE
H-1 ENGINE
APOLLO SPACECRAFT
IU
S-IVB STAGE
J-2 ENGINE
S-II STAGE
J-2 ENGINE
363 FT.
S-IC STAGE
F-1 ENGINE
SATURN I
UPRATED SATURN I
SATURN V
I-RM-D IND A2015D

FIGURE 1

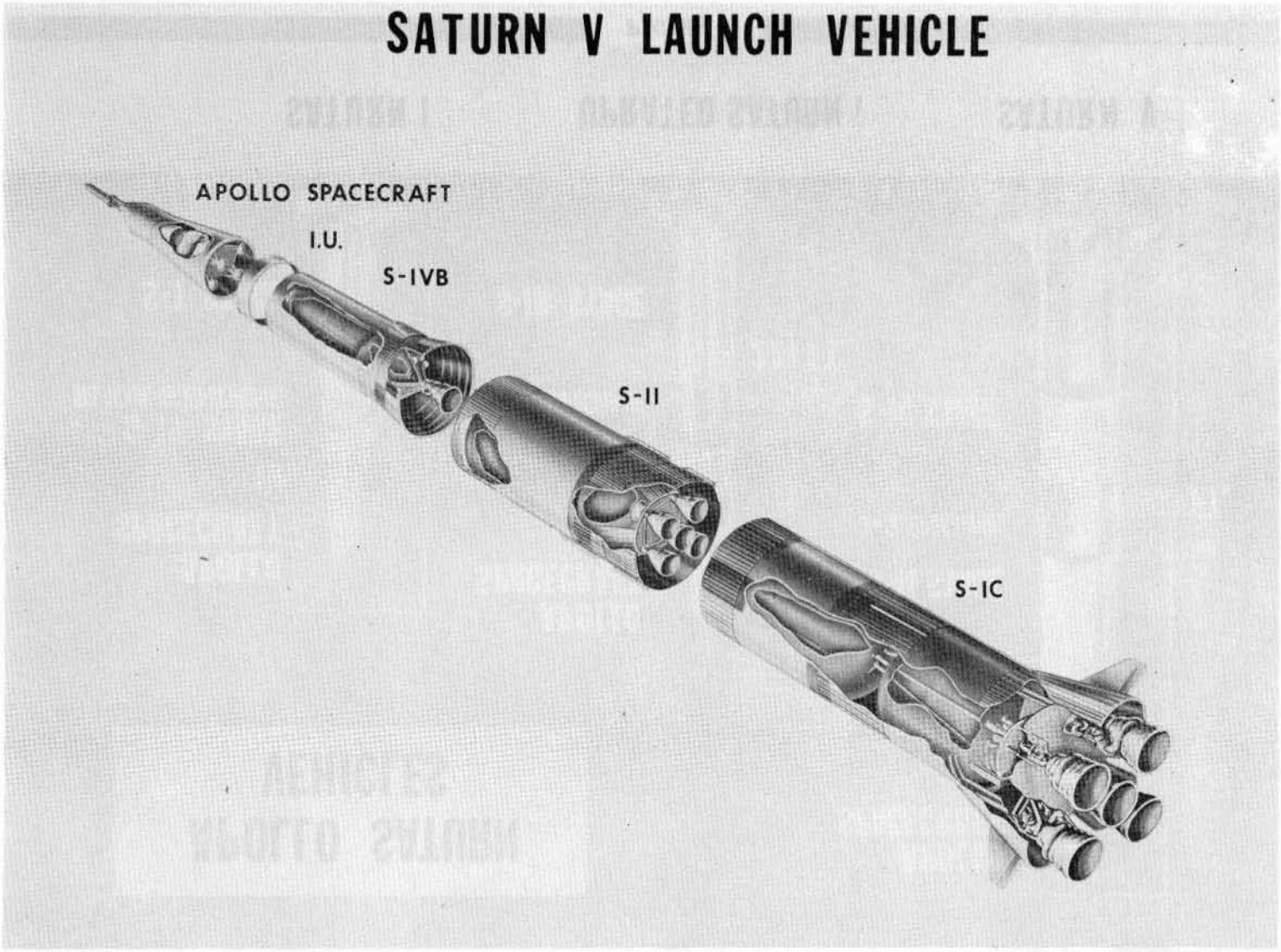
SATURN V LAUNCH VEHICLE
APOLLO SPACECRAFT
I.U.
S-IVB
S-II
S-IC
I-RM-D IND B1200-15B

FIGURE 2

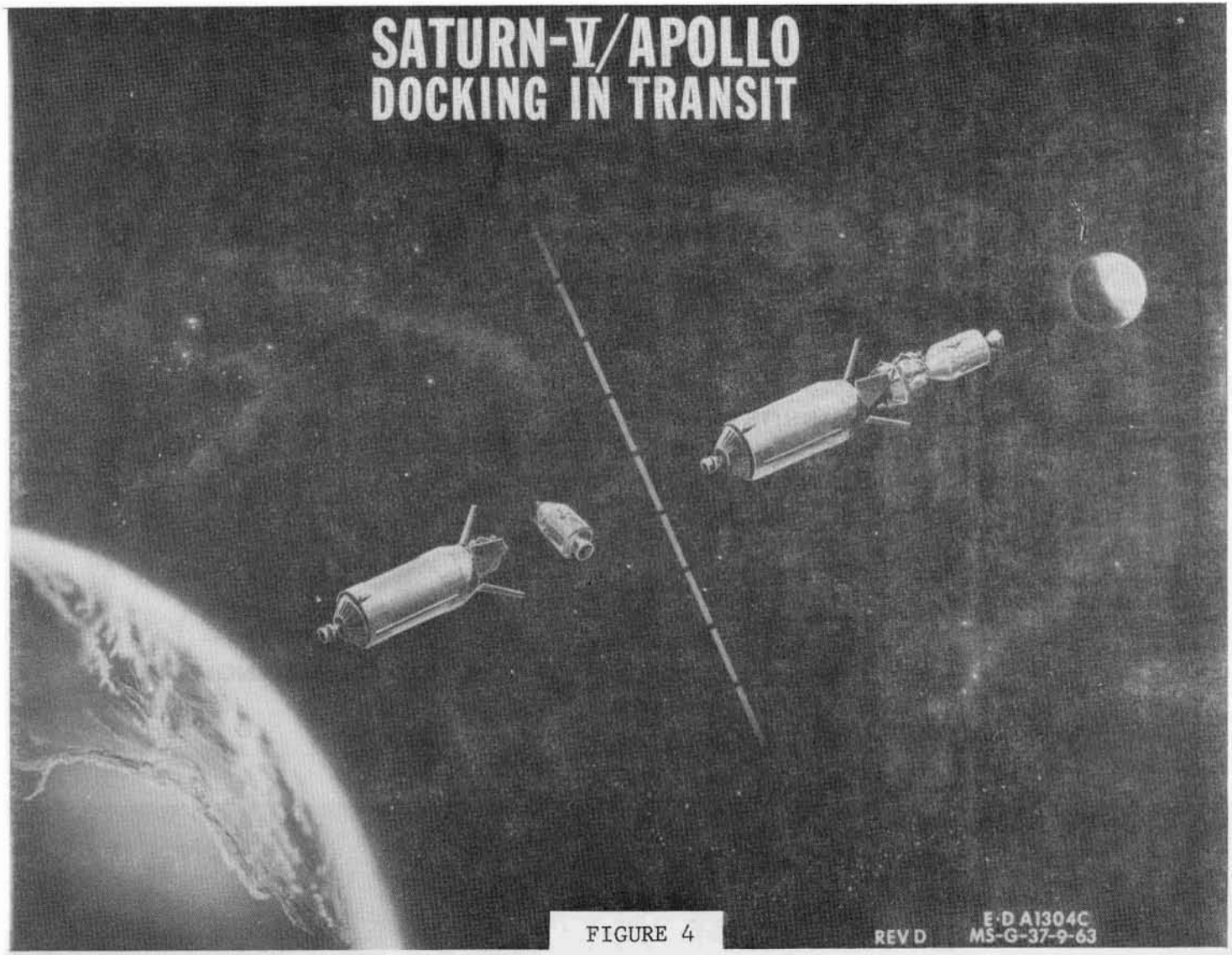

FIGURE 4

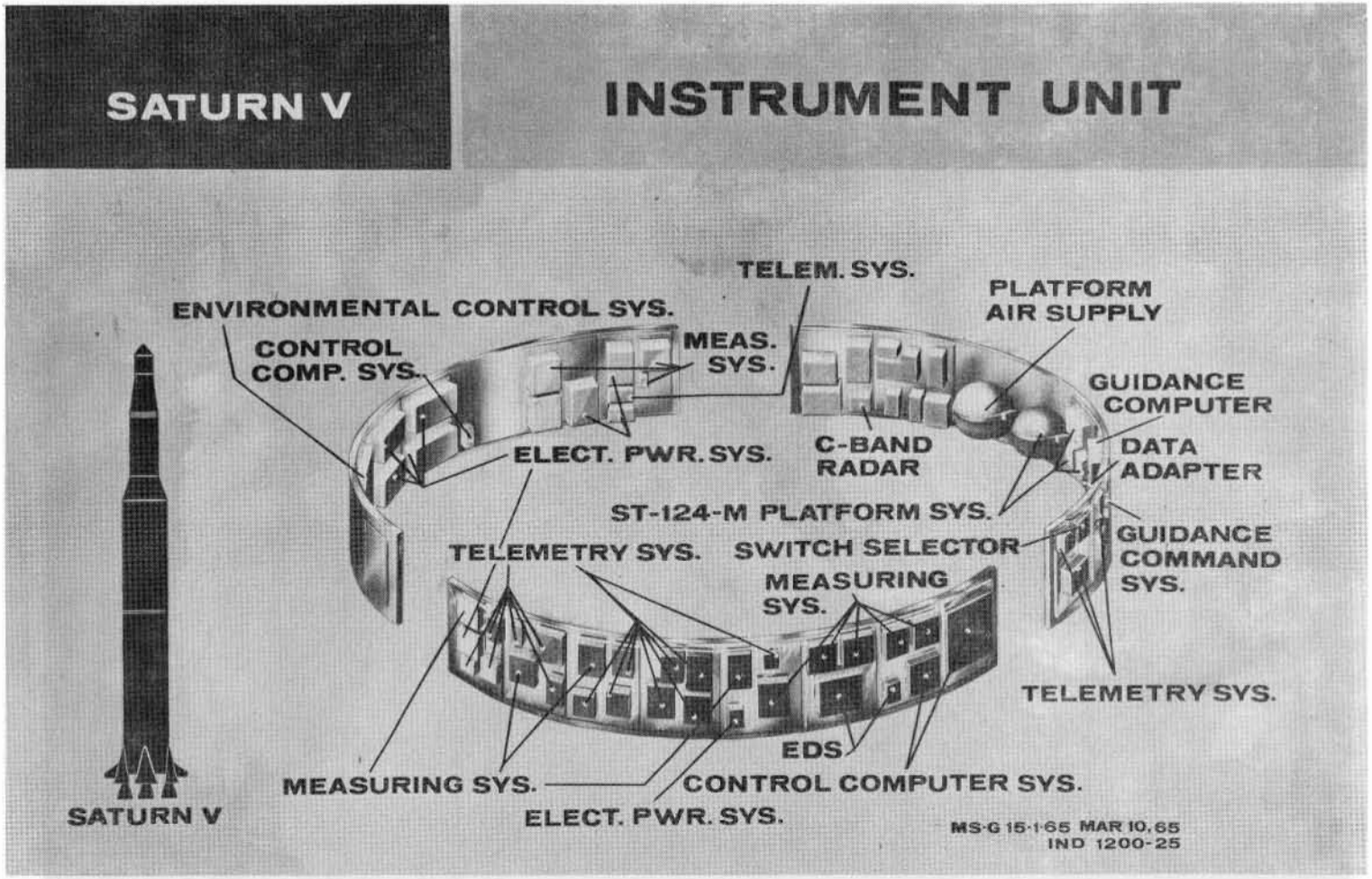
SATURN V
INSTRUMENT UNIT
TELEM. SYS.
ENVIRONMENTAL CONTROL SYS.
PLATFORM AIR SUPPLY
CONTROL COMP. SYS.
MEAS. SYS.
GUIDANCE COMPUTER
ELECT. PWR. SYS.
C-BAND RADAR
DATA ADAPTER
ST-124-M PLATFORM SYS.
GUIDANCE COMMAND SYS.
TELEMETRY SYS.
SWITCH SELECTOR
MEASURING SYS.
TELEMETRY SYS.
EDS
MEASURING SYS.
CONTROL COMPUTER SYS.
ELECT. PWR. SYS.
SATURN V
MS-G 15-1-65 MAR 10, 65
IND 1200-25

FIGURE 3

BLOCK DIAGRAM OF SATURN V NAVIGATION, GUIDANCE, AND CONTROL SYSTEM

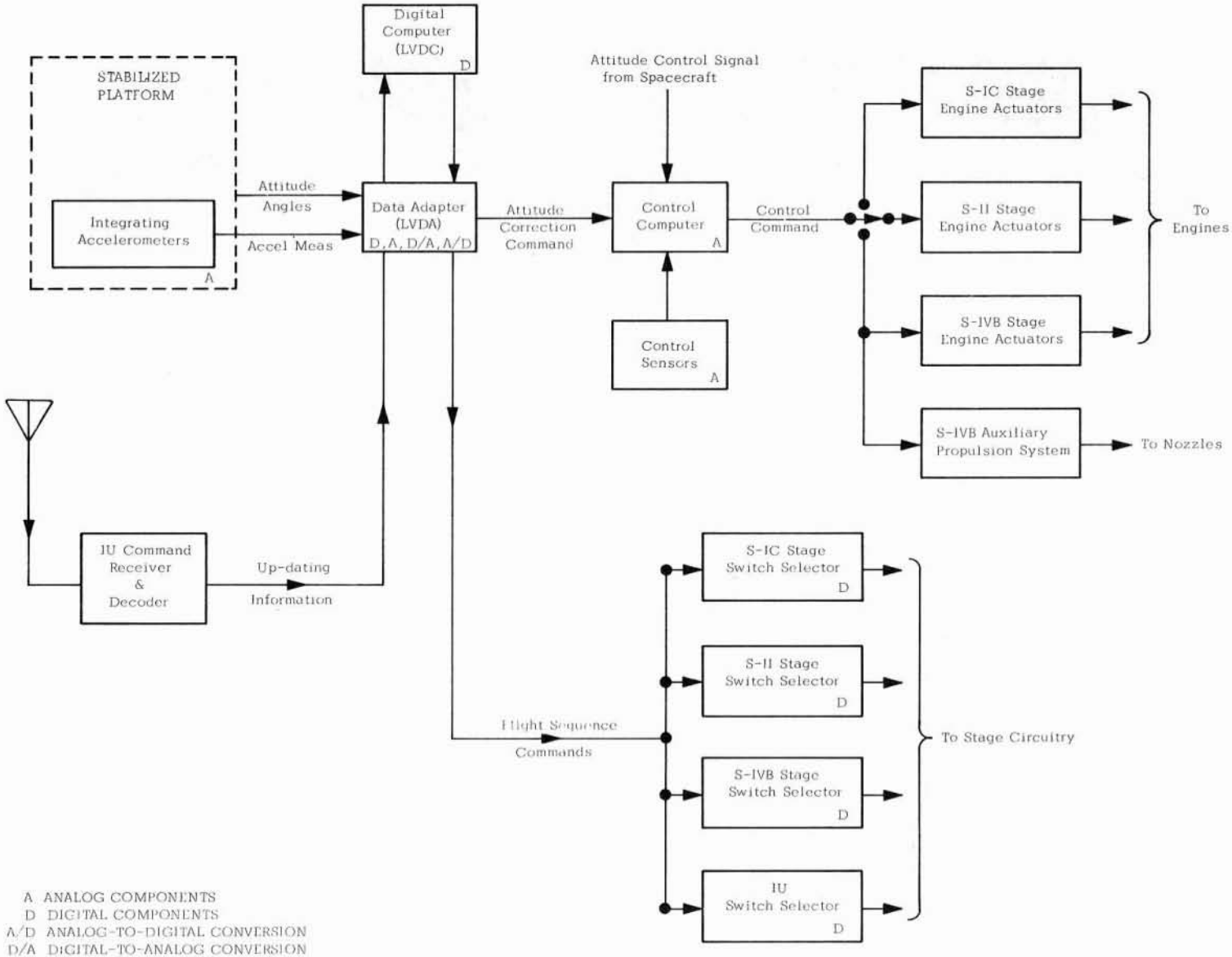

A ANALOG COMPONENTS
D DIGITAL COMPONENTS
A/D ANALOG-TO-DIGITAL CONVERSION
D/A DIGITAL-TO-ANALOG CONVERSION

Figure 5

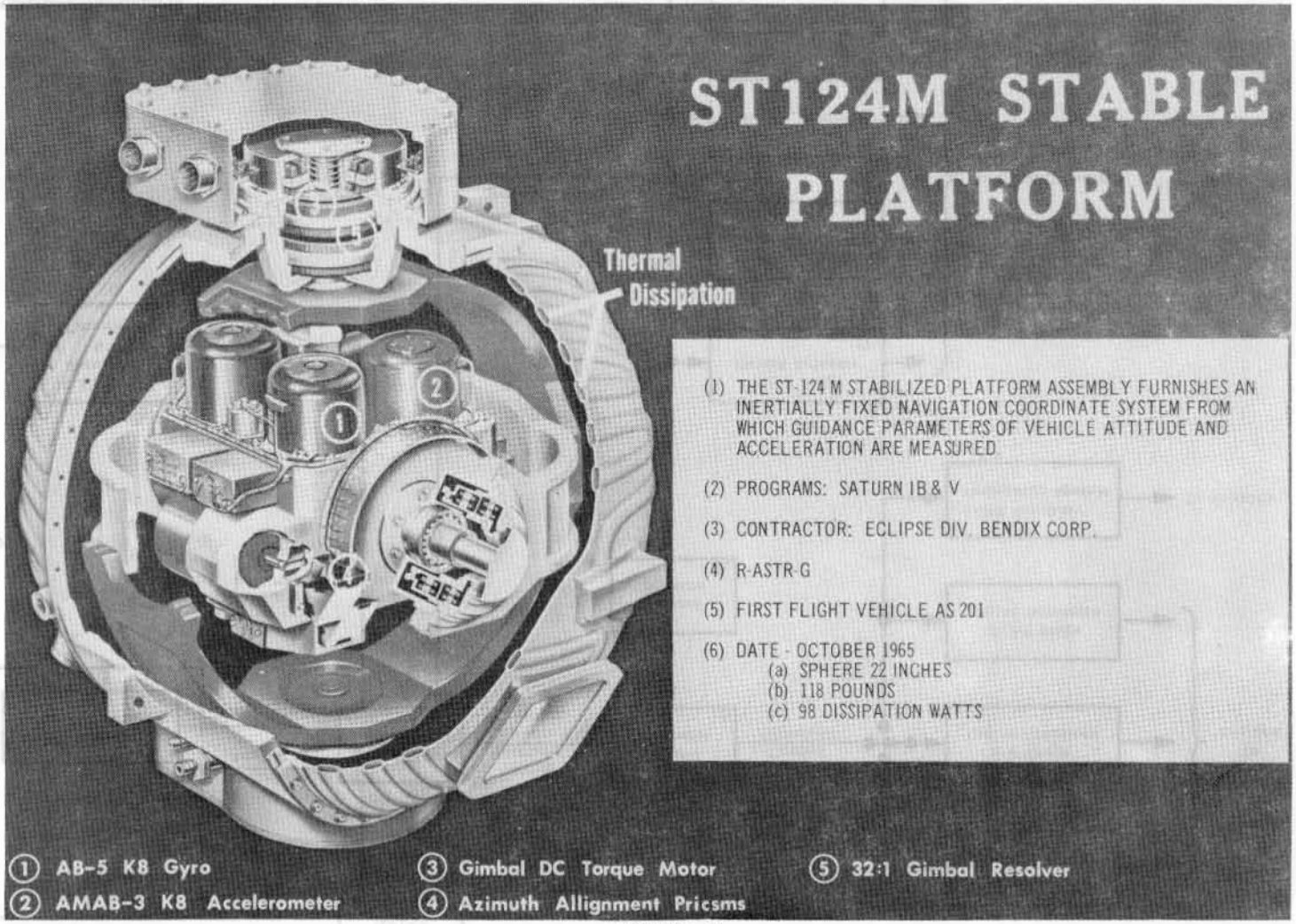
ST124M STABLE PLATFORM
Thermal Dissipation
(1) THE ST-124 M STABILIZED PLATFORM ASSEMBLY FURNISHES AN INERTIALLY FIXED NAVIGATION COORDINATE SYSTEM FROM WHICH GUIDANCE PARAMETERS OF VEHICLE ATTITUDE AND ACCELERATION ARE MEASURED
(2) PROGRAMS: SATURN IB & V
(3) CONTRACTOR: ECLIPSE DIV. BENDIX CORP.
(4) R-ASTR-G
(5) FIRST FLIGHT VEHICLE AS 201
(6) DATE - OCTOBER 1965
(a) SPHERE 22 INCHES
(b) 118 POUNDS
(c) 98 DISSIPATION WATTS
1 AB-5 K8 Gyro
2 AMAB-3 K8 Accelerometer
3 Gimbal DC Torque Motor
4 Azimuth Allignment Pricsms
5 32:1 Gimbal Resolver

FIGURE 6

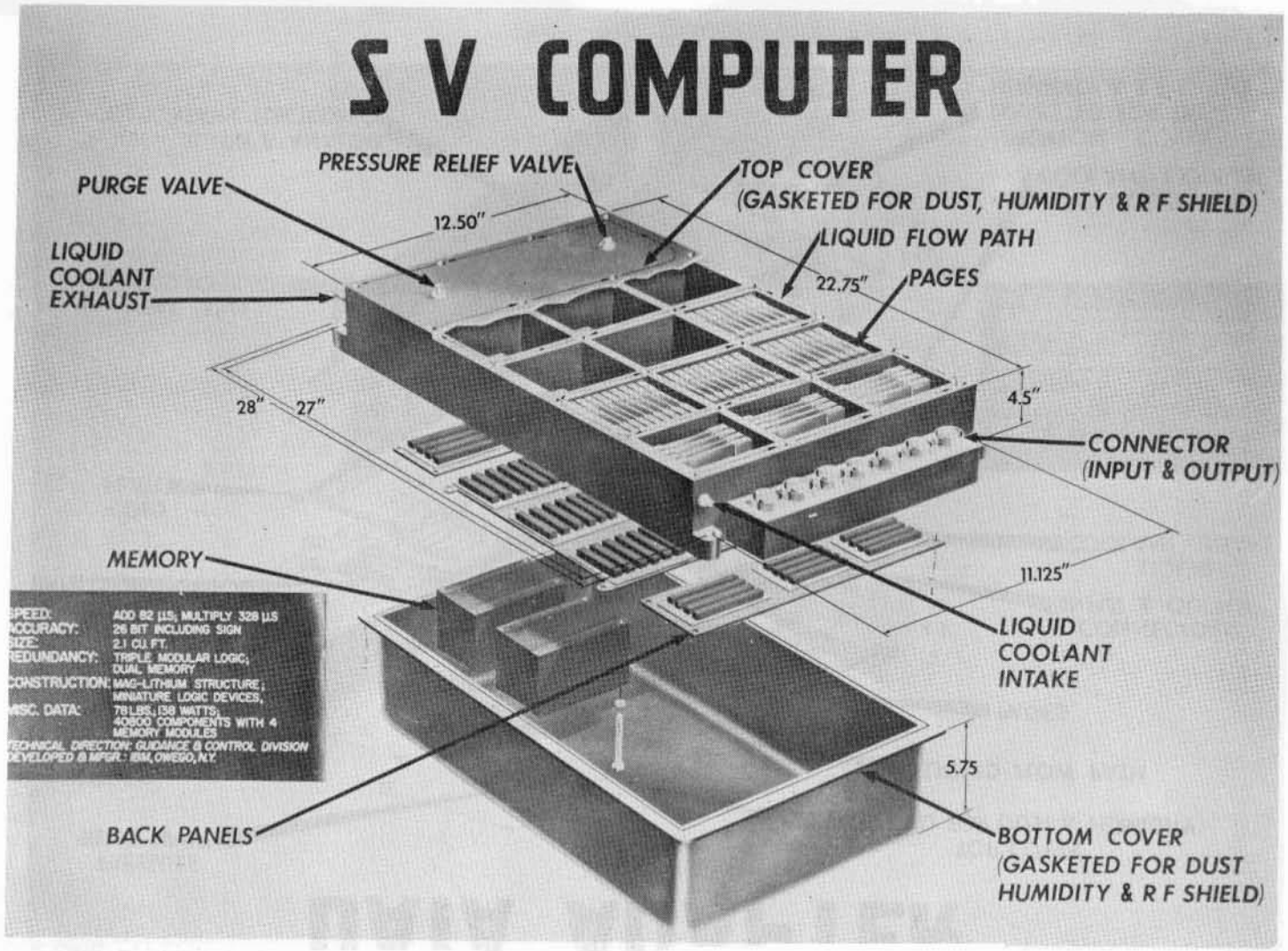
S V COMPUTER
PRESSURE RELIEF VALVE
PURGE VALVE
TOP COVER
(GASKETED FOR DUST, HUMIDITY & R F SHIELD)
12.50"
LIQUID FLOW PATH
LIQUID
COOLANT
EXHAUST
22.75"
PAGES
28"
27"
4.5"
CONNECTOR
(INPUT & OUTPUT)
MEMORY
11.125"
SPEED: ADD 82 µS; MULTIPLY 328 µS
ACCURACY: 26 BIT INCLUDING SIGN
SIZE: 2.1 CU. FT.
REDUNDANCY: TRIPLE MODULAR LOGIC; DUAL MEMORY
CONSTRUCTION: MAG-LITHUM STRUCTURE; MINIATURE LOGIC DEVICES;
MISC. DATA: 78 LBS.; 138 WATTS; 40800 COMPONENTS WITH 4 MEMORY MODULES
TECHNICAL DIRECTION: GUIDANCE & CONTROL DIVISION
DEVELOPED & MFGR.: IBM, ONEGO, N.Y.
LIQUID
COOLANT
INTAKE
5.75
BACK PANELS
BOTTOM COVER
(GASKETED FOR DUST
HUMIDITY & R F SHIELD)

FIGURE 7

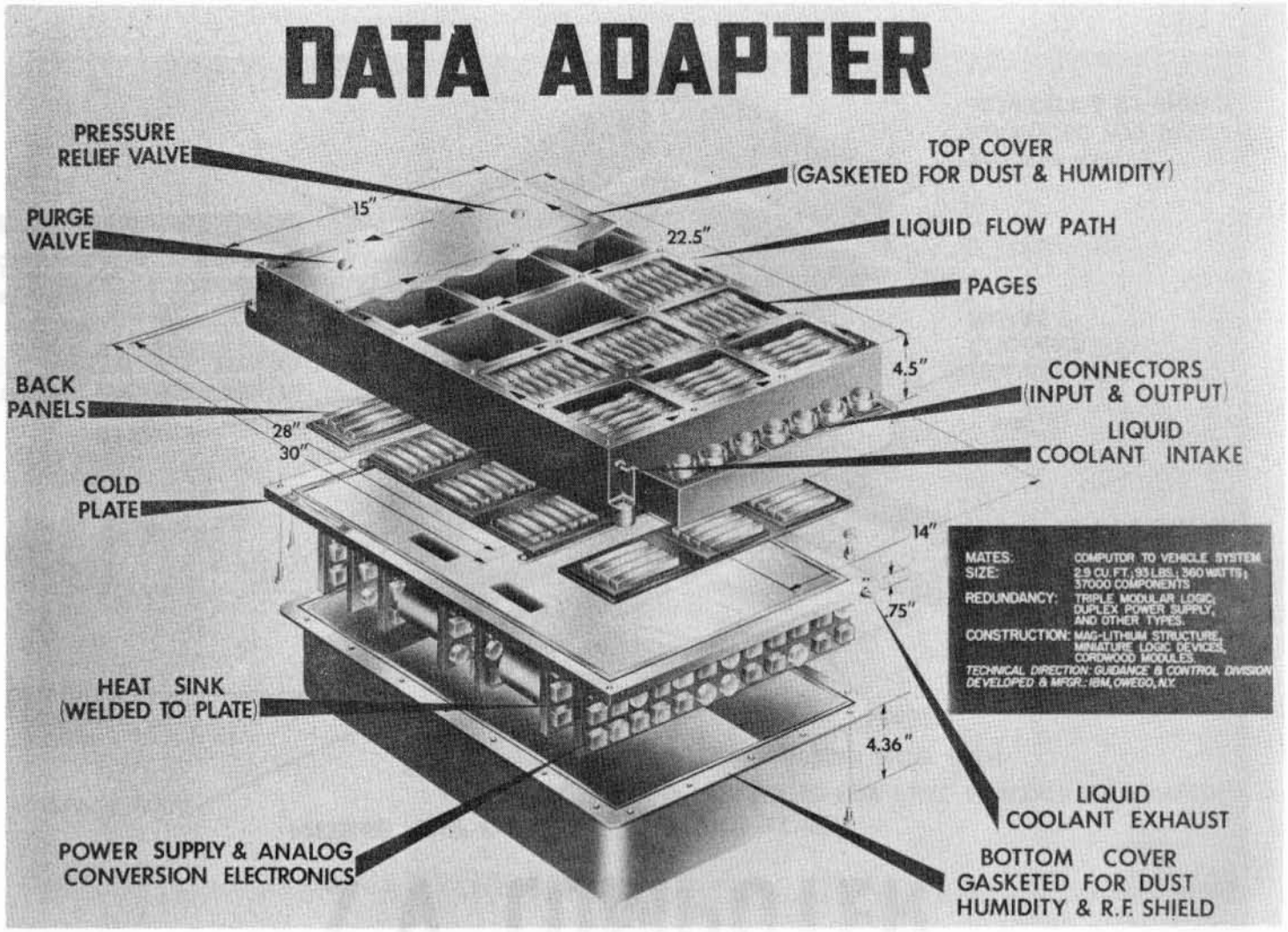
DATA ADAPTER
PRESSURE RELIEF VALVE
PURGE VALVE
BACK PANELS
COLD PLATE
HEAT SINK (WELDED TO PLATE)
POWER SUPPLY & ANALOG CONVERSION ELECTRONICS
TOP COVER (GASKETED FOR DUST & HUMIDITY)
LIQUID FLOW PATH
PAGES
CONNECTORS (INPUT & OUTPUT)
LIQUID COOLANT INTAKE
LIQUID COOLANT EXHAUST
BOTTOM COVER GASKETED FOR DUST HUMIDITY & R.F. SHIELD
15"
22.5"
4.5"
28"
30"
14"
.75"
4.36"
MATES: COMPUTOR TO VEHICLE SYSTEM
SIZE: 2.9 CU. FT., 93 LBS., 360 WATTS, 37000 COMPONENTS
REDUNDANCY: TRIPLE MODULAR LOGIC, DUPLEX POWER SUPPLY, AND OTHER TYPES.
CONSTRUCTION: MAG-LITHIUM STRUCTURE, MINIATURE LOGIC DEVICES, CORDWOOD MODULES.
TECHNICAL DIRECTION: GUIDANCE & CONTROL DIVISION
DEVELOPED & MFGR.: IBM, OWEGO, N.Y.

FIGURE 8

FLIGHT CONTROL COMPUTER

SATURN IB - SATURN V

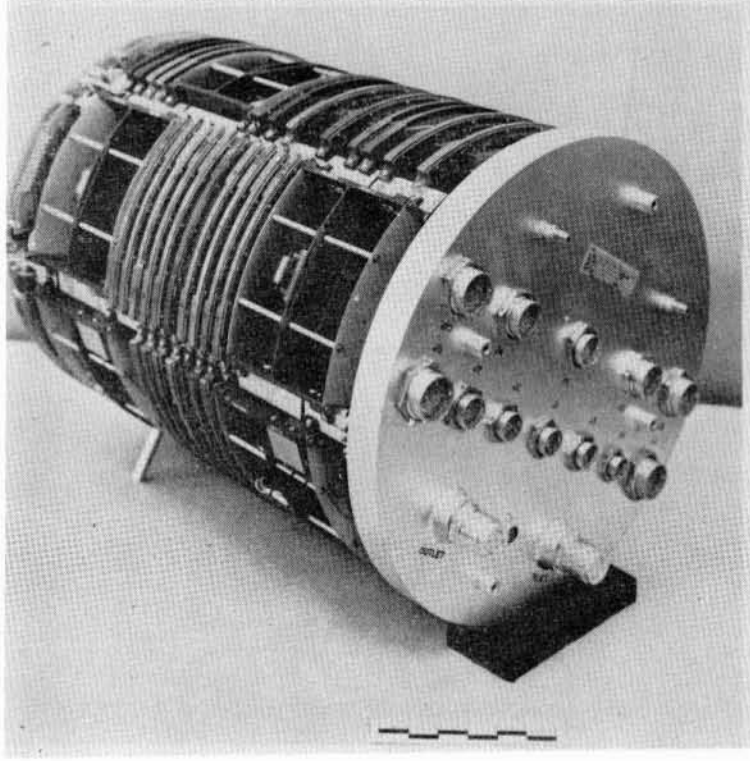

1. FUNCTION: THE FLIGHT CONTROL COMPUTER IS AN ANALOG DEVICE WHICH GENERATES THE PROPER CONTROL COMMANDS FOR THE ENGINE ACTUATORS AND THE S-IVB AUXILIARY PROPULSION SYSTEM.
2. PROGRAM COMPONENT IS APPLICABLE TO:
   SATURN V IU STAGE
   SATURN IB IU STAGE
3. DEVELOPMENT AND PRODUCTION CONTRACTOR: ELECTRONIC COMMUNICATIONS, INC.
4. COGNIZANT ASTRIONICS ORGANIZATION: R-ASTR-NF
5. FIRST FLIGHT: VEHICLE AS-501 DATE:
   VEHICLE AS-201 DATE: FEB 26, 1966

1. Weight: 125 pounds
2. Size: length 26" diameter 18 1/4" volume 6800 cu.in.
3. Power consumption: 150 watts

FIGURE 9

FIGURES 10 THROUGH 15 ARE INCLUDED

IN THE TEXT

REDUNDANCY APPLICATIONS IN THE SATURN V NAVIGATION, GUIDANCE, AND CONTROL SYSTEM

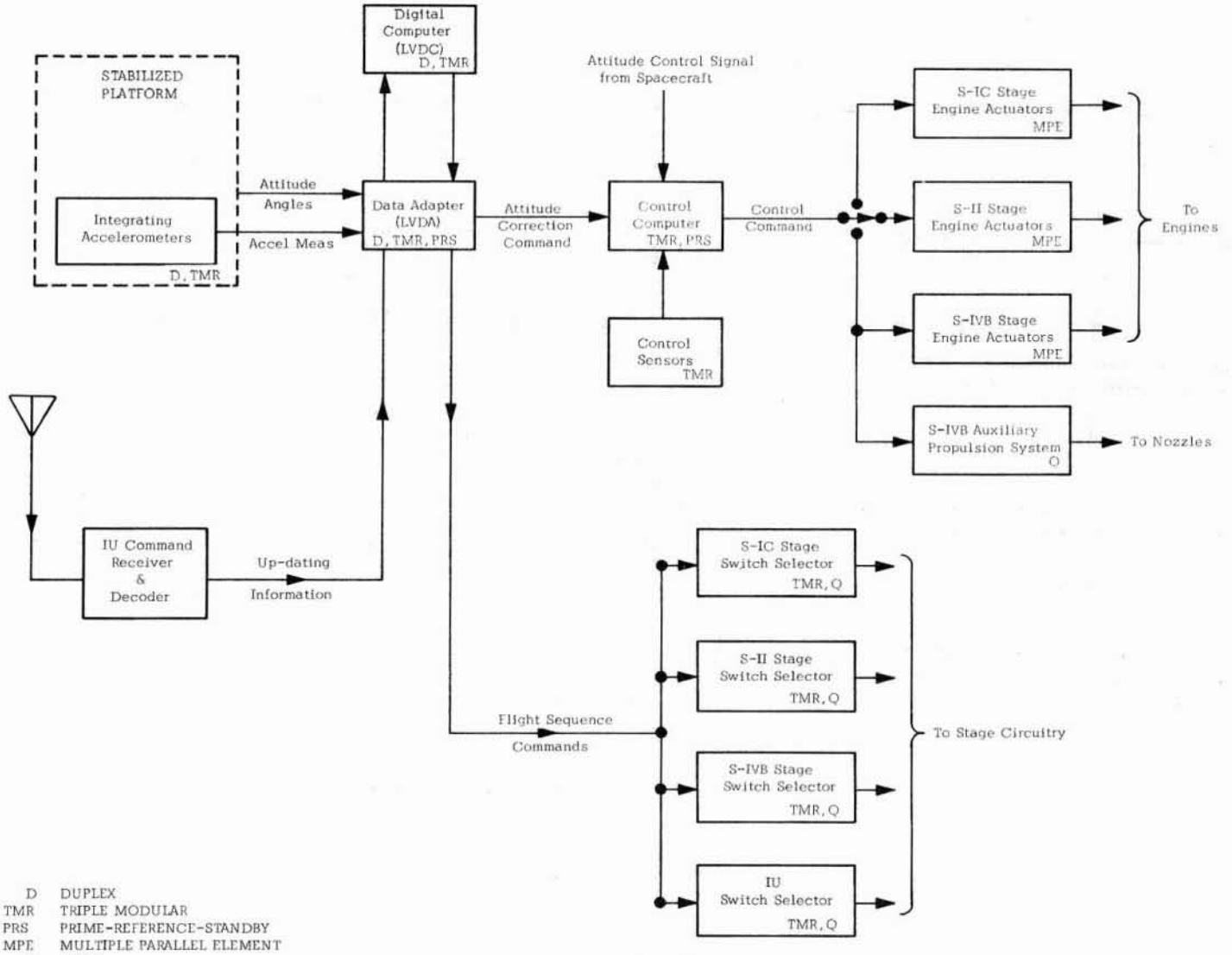

D DUPLEX
TMR TRIPLE MODULAR
PRS PRIME-REFERENCE-STANDBY
MPE MULTIPLE PARALLEL ELEMENT
Q QUAD

Figure 16

BLOCK DIAGRAM OF THE
LAUNCH VEHICLE DIGITAL COMPUTER

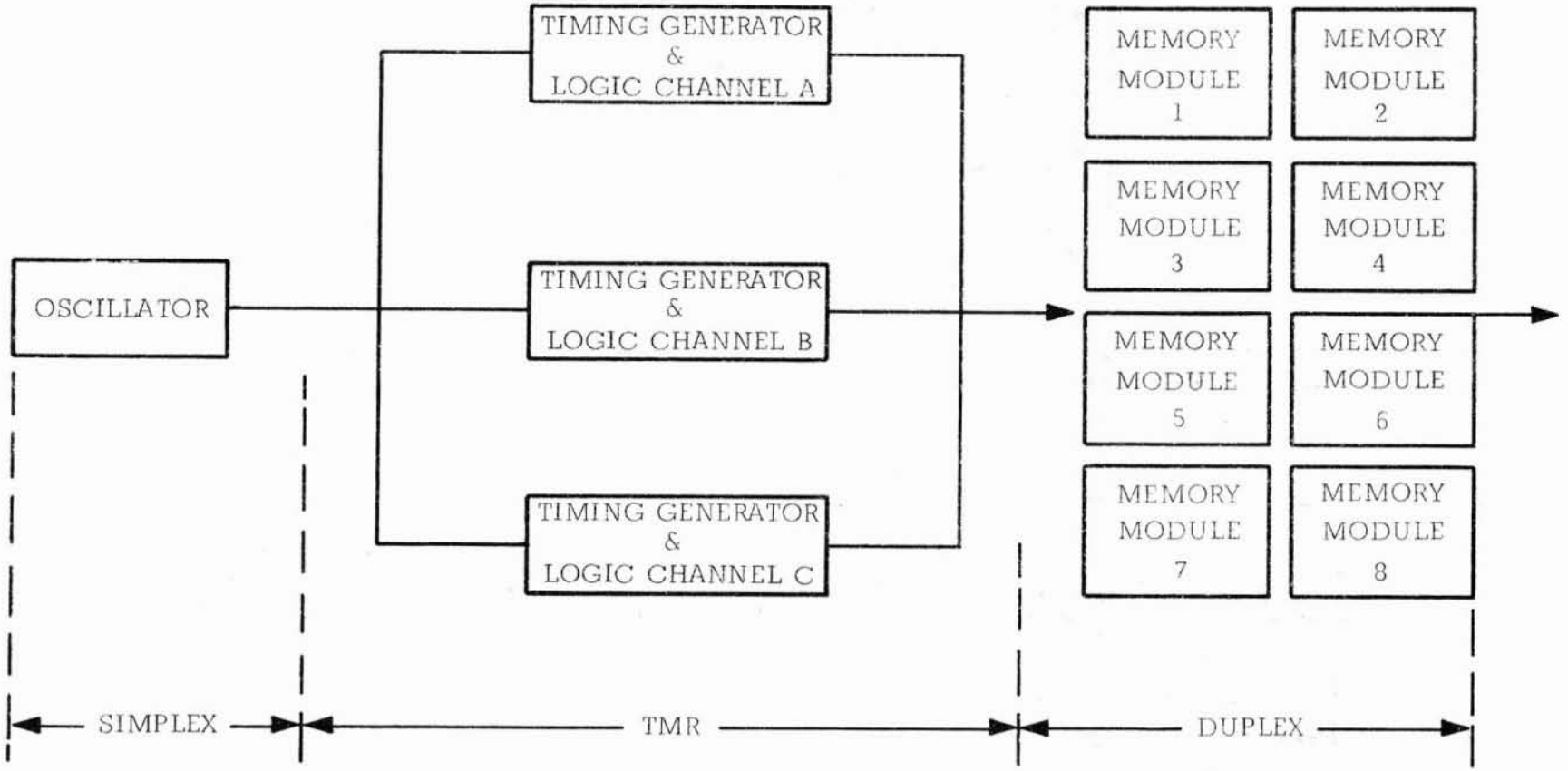

FIGURE 17

TYPICAL LVDA DUPLEX POWER SUPPLY

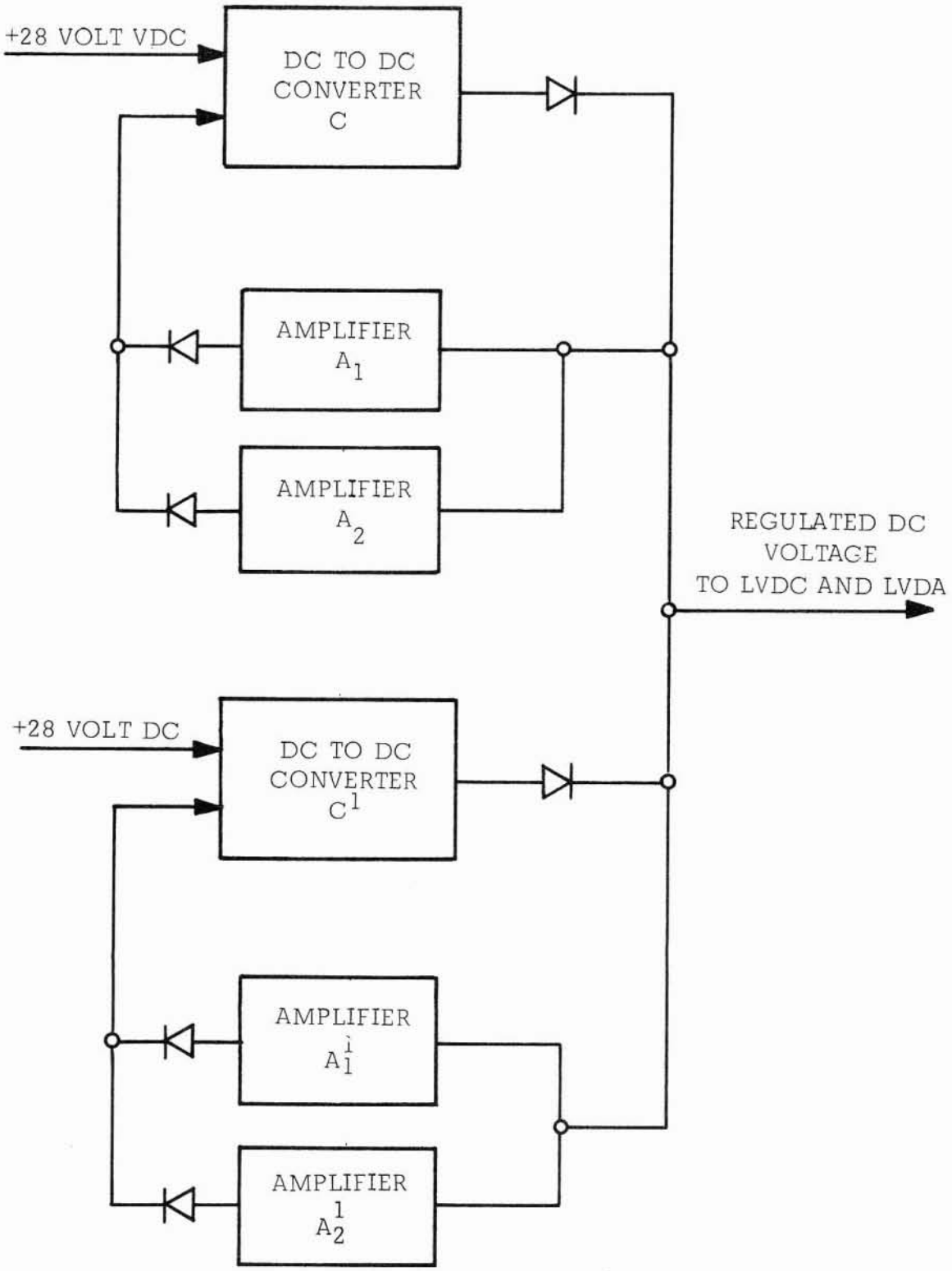

FIGURE 18

ATTITUDE RATE SYSTEM (SINGLE CHANNEL)

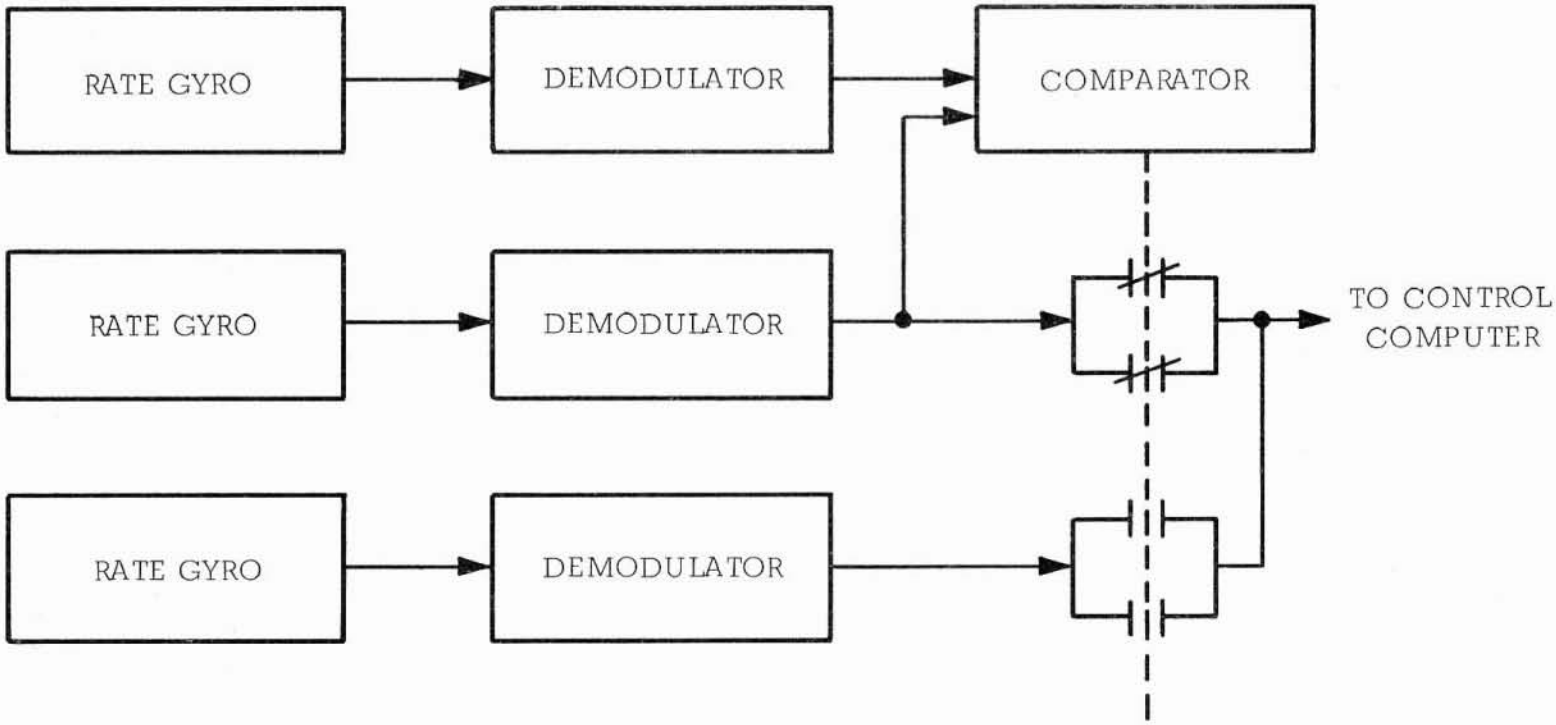

FIGURE 19

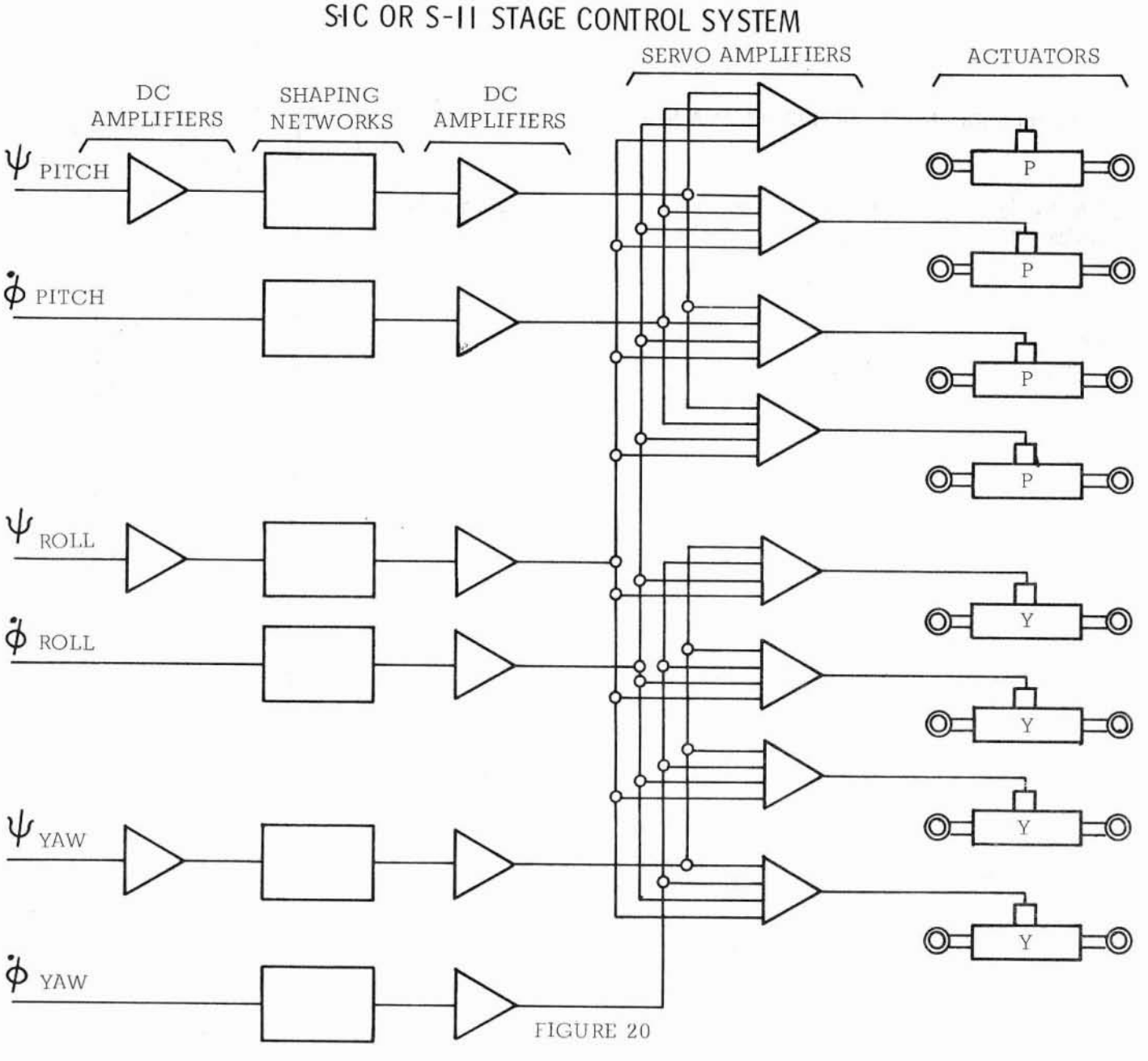
S-IC OR S-II STAGE CONTROL SYSTEM
DC AMPLIFIERS
SHAPING NETWORKS
DC AMPLIFIERS
SERVO AMPLIFIERS
ACTUATORS
ψ PITCH
φ̇ PITCH
ψ ROLL
φ̇ ROLL
ψ YAW
φ̇ YAW
P
P
P
P
Y
Y
Y
Y

FIGURE 20

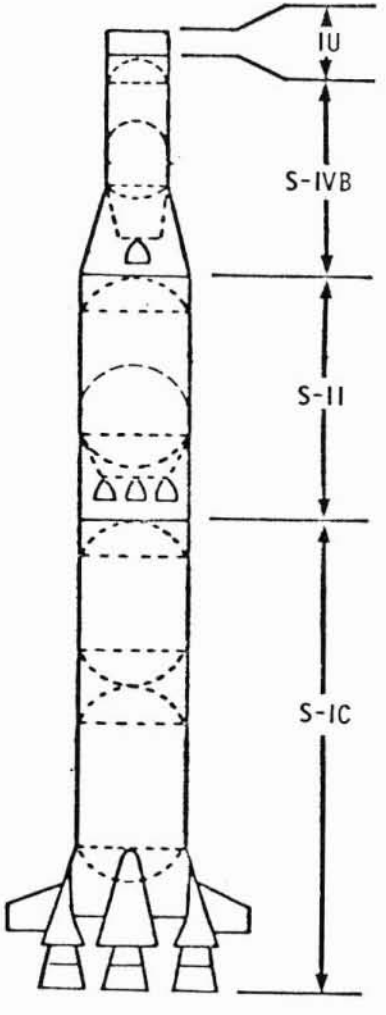

	CATEGORY I (CREW LOSS)	CATEGORY II (MISSION LOSS)	PRELAUNCH VEH. LOSS ONLY	TOTAL
IU	CR = 0 R_L = 1.000000	CR = 12,649 R_L = 0.987351	CR = 0 R_L = 1.000000	CR = 12,649 R_L = 0.987351
S-IVB	CR = 1,432 R_L = 0.998568	CR = 24,789 R_L = 0.975211	CR = 218 R_L = 0.999782	CR = 26,439 R_L = 0.973561
S-II	CR = 4,636 R_L = 0.995364	CR = 47,639 R_L = 0.952361	CR = 100 R_L = 0.999900	CR = 52,375 R_L = 0.947625
S-IC	CR = 2,998 R_L = 0.997002	CR = 543 R_L = 0.999457	CR = 77 R_L = 0.999923	CR = 3,618 R_L = 0.996382
SATURN V VEHICLE	CR = 9,041 R_L = 0.990959	CR = 83,492 R_L = 0.916508	CR = 395 R_L = 0.999605	CR = 92,928 R_L = 0.907072

FIGURE 21 SATURN V Vehicle Criticality (CR) and Reliability (R_L)

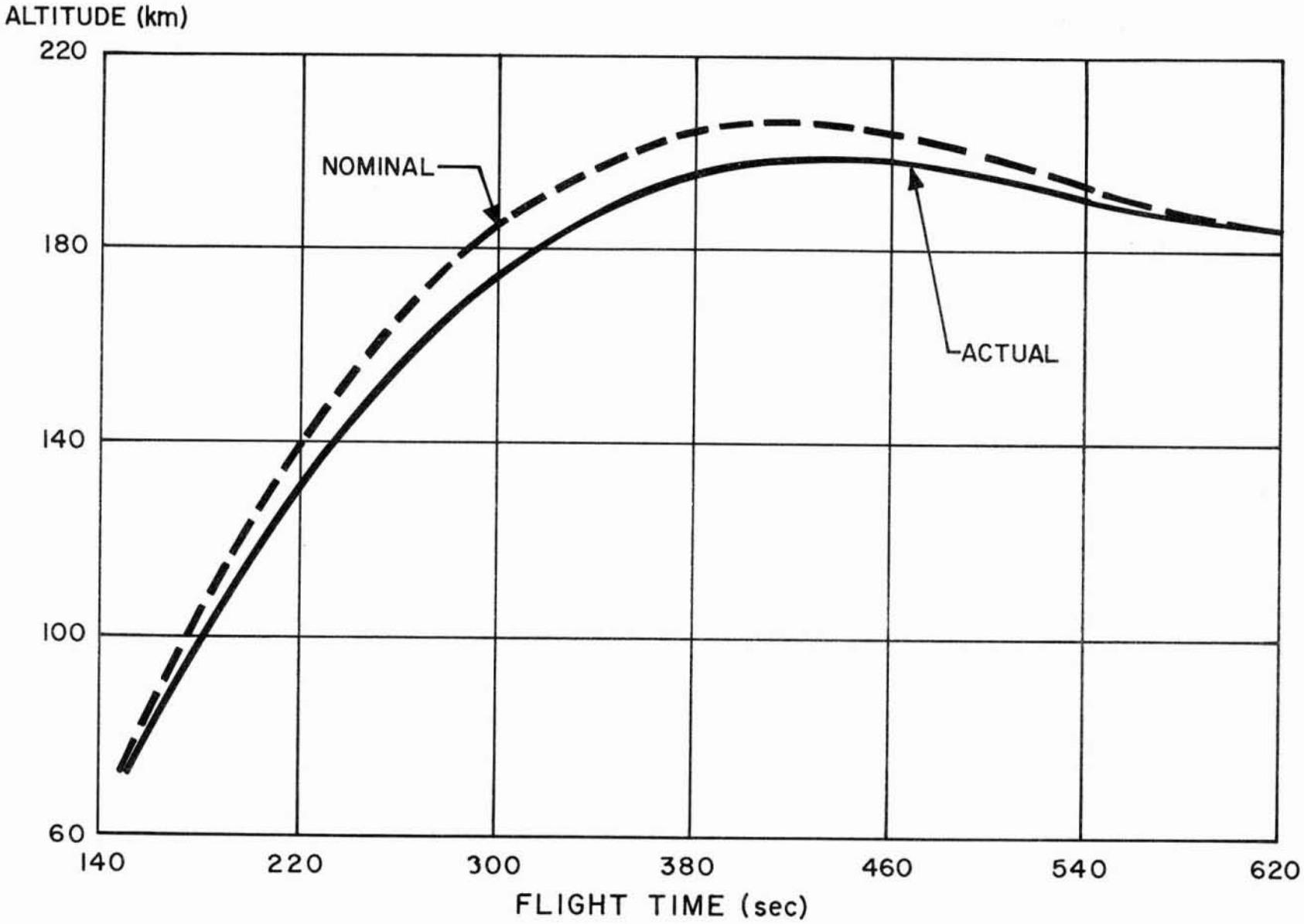

S-IV STAGE ALTITUDE TIME HISTORY

Fig. 22