X1.14 X1.17

LIQUID ROCKET PROPELLANT COMPATIBILITY TESTING

by

William T. McFarlen

Rocketdyne
A Division of North American Aviation, Inc.,
Canoga Park, California

SATURN HISTORY DOCUMENT
University of Alabama Research Institute
History of Science & Technology Group

Date ---------- Doc. No. --------

Presented at the

American Society for Testing and Materials
Technical Division 0 Symposium on
Aerospace Test Methods and Materials
Boston, Massachusetts
26-28 June 1967

LIQUID ROCKET PROPELLANT COMPATIBILITY TESTING

by

William T. McFarlen
Materials and Processes

Rocketdyne
A Division of North American Aviation, Inc.,
Canoga Park, California

ABSTRACT

Material-propellant compatibility as related to liquid rocket propulsion system design criteria is discussed and applicable test methods to derive usable design data are presented. Test methods, with emphasis on metallic materials, are discussed and the shortcomings of a number of these test methods are pointed out. These tests include static immersion tests, stress-corrosion tests, flow tests, impact tests, and tests to determine the effect of cracks and notches in metals on compatibility. A general outline for the evaluation of metallic and nonmetallic materials with respect to propellant compatibility is presented.

INTRODUCTION

One of the prime considerations in the design of a liquid rocket propulsion system is the possible interaction between the propellants and the materials of construction. Examples of such interactions are simple chemical dissolution, solubility effects, selective chemical attack, stress corrosion, fatigue corrosion, thermal ignition, effect of the environment on notched strength, and deterioration of other mechanical properties. Materials evaluation in this area falls into the category of material compatibility or material-propellant compatibility. Two requirements must be fulfilled if this area of consideration is to be satisfied:

1. Establishment of propulsion system design criteria
2. Development of testing techniques adequate to provide material-propellant compatibility data for satisfying requirement 1

The fact that a gap exists between the two requirements is evidenced by the large amount of repetitive and sometimes redundant compatibility data that appear in the literature. A large portion of these data are not applicable in design situations. The fact that is often overlooked in propellant compatibility testing is that it is not so important whether a particular alloy is compatible with a particular propellant, but whether a tank or a valve fabricated from that alloy will be compatible. This question can be answered only if the necessary design criteria for material behavior have been established and test methods are available to provide the data needed to determine whether the criteria will be satisfied.

CRYOGENIC AND STORABLE LIQUID ROCKET PROPELLANTS

A large number of liquid rocket propellants are presently in use or under investigation. Typical fuels and oxidizers in use or under investigation are listed in Tables I and II.

Cryogenic propellants have been in use for a number of years. Liquid fluorine was used as an oxidizer for the Nomad program. Liquid oxygen in combination with RP-1 fuel has been used in the Thor, Jupiter, Atlas, and Apollo programs (Ref. 1). Liquid hydrogen (para form) is being used with liquid oxygen to power the second stage of the uprated Saturn 1 and the second and third stages of the Saturn V vehicle. The current trend in liquid rocket propulsion systems is, however, toward the use of high energy earth and space storable propellants (Ref. 2 and 3).

The preliminary interest in high-energy storable propellants was primarily due to military needs for liquid propulsion systems having instant readiness. Storable propellant systems have since been utilized in a number of NASA-sponsored space programs such as Mariner, Gemini, and Apollo, where storable represent a distinct advantage over cryogenic propellant systems such as RP-1/LOX and LH_2/LOX. These advantages may be summarized as follows:

1. A minimum time for vehicle launch
2. Hypergolic nature of most storable propellant combinations, thus eliminating complex ignition systems
3. Increased vehicle payload capabilities resulting from minimum tankage insulation requirements, higher bulk densities of the propellants, and minimum loss of propellants through boiloff
4. High-density impulse of a number of storable propellant combinations, thus equating the performance of oridinary cryogenic propellant combinations such as RP-1/LOX
5. Increased reliability resulting from simpler engine design

TABLE I

FUELS PRESENTLY IN USE OR UNDER INVESTIGATION

Name	Abbreviation	Formula or Composition	Classification*
Aerozine - 50	50/50	50% N_2H_4/50% $(CH_3)_2N_2H_2$	ES
Ammonia	---	NH_3	ES
Aniline	---	$C_6H_5NH_2$	ES
Diethylene Triamine	DETA	$(H_2NC_2H_4)_2NH$	ES
Ethyl Alcohol	---	C_2H_5OH	ES
Hydradyne V	---	75% N_2H_4/25% $CH_3N_2H_3$	ES
Hydrazine	---	N_2H_4	ES
Kerosene	RP-1	Approximately $C_{13}H_{28}$	ES
Liquid Hydrogen	LH_2	H_2	C
Mixed Amine Fuels	MAF-1, MAF-3	---	ES
Mixed Hydrazine Fuels	MHF-1, MHF-3	---	ES
Monomethyl Hydrazine	MMH	$CH_3N_2H_3$	ES
Pentaborane	---	B_5H_9	ES
Unsymmetrical Dimethylhydrazine	UDMH	$(CH_3)_2N_2H_2$	ES
Unsymmetrical Dimethylhydrazine/ Diethylene Triamine	U-DETA	60% $(CH_3)_2N_2H_2$/ 40% $(H_2NC_2H_4)_2NH$	ES

*ES = earth storable, 77 F nominal

SS = space storable; arbitarily NBP -238 F

C = cryogenic, NEP -238 F

TABLE II

OXIDIZERS PRESENTLY IN USE OR UNDER INVESTIGATION

Name	Abbreviation	Formula or Composition	Classification*
Bromine Pentafluoride	BPF	BrF_5	ES
Chlorine Trifluoride	CTF	ClF_3	ES
Hydrogen Peroxide (90%)	---	90% H_2O_2/10% H_2O	ES
Inhibited Red Fuming Nitric Acid	IRFNA	84.4% HNO_3, 14% N_2O_4, 1% H_2O, 0.6% HF	ES
Liquid Fluorine	LF_2	F_2	C
Liquid Fluorine/ Liquid Oxygen	FLOX	30% F_2/70% O_2(typical)	C
Liquid Oxygen	LOX	O_2	C
Mixed Oxides of Nitrogen	MON	75% N_2O_4/25% NO (typical)	ES
Nitrogen Tetroxide	NTO	$N_2O_4 \rightleftharpoons 2NO_2$	ES
Oxygen Difluoride	---	OF_2	SS
Perchloryl Fluoride	PF	ClO_3F	SS
Tetrafluorohydrazine	TFH	N_2F_4	SS

*ES = earth storable, 77 F nominal

SS = space storable; arbitrarily, NBP > -238 F

C = cryogenic, NBP < -238 F

The high-energy storable propellants, however, do have disadvantages. Most of these propellants are costly and because of their reactive and toxic nature present materials compatibility and handling problems.

Numerous investigations have been conducted to determine the interaction between rocket propellants and materials of construction. Unfortunately, a large amount of this information is of little value in the selection of materials for new liquid propulsion systems. The deficiencies in much of the accumulated data fall into three areas: methods of test, test interpretation, and orientation of testing. Aside from theoretical interest (corrosion mechanisms, kinetics of propellant decomposition, etc.), propellant compatibility testing should be orientated toward providing information useful to the vehicle and propulsion system designer. To accomplish this end, a knowledge of propulsion system requirements, careful selection of test methods, and a thorough evaluation of test data are required.

DESIGN CONSIDERATIONS IN DETERMINING PROPELLANT COMPATIBILITY

The designer of liquid propulsion systems or the potential user of liquid rocket propellants is confronted with a number of possible interactions which may occur between the materials of construction and the propellants. These numerous interactions may be grouped under three headings: (1) effect of the propellant on the materials of construction, (2) effect of the materials of construction on the propellant, and (3) effect of corrosion or reaction products on system operation. Each of these categories is briefly discussed below.

EFFECT OF THE PROPELLANT ON THE MATERIALS OF CONSTRUCTION

The success of any propulsion system is directly related to proper selection of materials. In the case of storable propellant systems, proper material selection is of particular importance because of the reactive and corrosive nature of the propellants and long storage times involved.

The reaction of a propellant with a metallic material is classified as corrosion. Corrosion may result in gradual dissolution of a metal or alloy, selective pitting, intergranular attack, fatigue corrosion, or stress-corrosion cracking. Each of these potential modes must be evaluated. Also other environmental effects must be considered, such as crack propagation rates, increase in notch sensitivity, etc.

Some metals or alloys may be highly reactive in a propellant, such as titanium in liquid oxygen (LOX), where a small energy input may be sufficient to trigger an explosion or fire. Corrosion rates will be affected by contaminants in the propellants, such as water in nitrogen tetroxide (NTO), which reacts to form nitric acid, or hydrofluoric acid in chlorine trifluoride. Temperature effects can sometimes be pronounced, since many corrosion rates are greatly increased with an increase in temperature.

Corrosion processes which are diffision controlled or dependent upon surface films composed of a layer of insoluble corrosion products may be affected by the velocity of the propellant. Propulsion system storage requirements will dictate acceptable corrosion rates to a large extent. Because it is usually impossible to avoid bimetallic couples in fabrication of a propulsion system, careful consideration must be given to potential galvanic couples.

Material variables affecting behavior in corrosive environments are surface flaws and cracks, weldments, heat treatment, internal and applied stress, and directionality of wrought structures. With respect to weldments, the heat-affected zone as well as the weld metal must be considered. The internal and external defects that are produced during welding also must be considered. Important, too, is whether or not the hardware can be heat treated after welding. In the evaluation of braze alloys, samples of the base metals to be joined should be evaluated in the as-brazed condition since the thermal treatment given the metal during brazing may alter the corrosion properties of the alloy.

Consideration should be given to tensile stresses, and specimens should be evaluated at stress levels of approximately 70 to 80 percent of the yield strength. Grain direction also is important, and tests should be conducted in the longitudinal and long or short transverse directions.

Cryogenic propellants such as liquid oxygen, liquid hydrogen, and liquid fluorine pose additional materials problems because of their low temperatures. Materials which are compatible from a corrosion standpoint may have little ductility and mechanical impact strength at low temperatures. Thus, low-temperature mechanical properties also must be considered in evaluating materials for cryogenic propellant applications.

The compatibility of nonmetallic materials poses somewhat different problems than metallics. Since the nonmetallics are predominantly organic, consideration must be given to possible reactions with propellant oxidizers. Nonmetallic materials used for O-rings and seals may

undergo a number of changes upon exposure to rocket engine propellants such as volume swell, changes in elongation and hardness, chemical reactions, dissolution, and stress crazing (cracking under tensile stress).

In cryogenic applications, additional problems are encountered by losses in ductility and elongation. Velocity effects can sometimes be pronounced on nonmetallic materials. An example of such a phenomenon is the use of a polytetrafluoroethylene (TFE) in fluorine oxidizers. In static applications, this material has performed satisfactorily. However, under dynamic conditions (exposure to flowing oxidizer) severe reactions have been encountered.

Lubricants for turbopump bearing applications will be subjected to high loads and frictional heating. Selection of lubricants will therefore involve dynamic factors as well as compatibility with the propellant.

Although the previously mentioned points are not a complete list of materials compatibility problems and considerations, they should serve as a guide to point out the numerous considerations involved in selecting a material for liquid rocket propellant service.

EFFECT OF THE MATERIALS OF CONSTRUCTION ON THE PROPELLANT

Although usually of secondary concern in compatibility testing, the effect of the materials of construction on the propellant cannot be overlooked. As a result of the storage requirements imposed on a number of storable propellant systems (1 to 10 years), changes in propellant composition during storage must be considered. The materials of construction can affect propellant changes as follows:

1. They can act as a catalyst in promoting propellant decomposition which may result in: an explosion, a change in propellant composition, excessive tankage pressures, or excessive loss of propellant through venting.

2. By excessive corrosion, the composition of the propellant can change by a chemical reaction with the materials of construction.

Changes as a result of Item (1) are usually noted during routine compatibility testing. Sometimes overlooked are metal and alloy reaction products which can act as catalysts. An example of this phenomenon is the exposure of iron to anhydrous hydrazine. While iron is compatible with hydrazine, iron with iron oxide present is not compatible. Since hydrazine is a good reducing agent, it will react with iron oxide to liberate a large quantity of heat which can induce further reaction leading to a possible explosion or detonation. Although some materials do not show catalytic effects at ambient temperature, these effects may be quite pronounced at elevated temperatures.

Propellant changes as a result of Item (2) may not be apparent in short-term compatibility programs. Such changes are particularly important in selecting propellant tankage materials. An example of the composition changes in inhibited red fuming nitric acid (IRFNA) as the result of an 8-1/2-year storage in a 6061-T6 aluminum alloy missile tank are shown in Table III.

TABLE III

ANALYSIS OF IRFNA AFTER 8-1/2-YEAR STORAGE
IN A 6061-T6 ALUMINUM ALLOY MISSILE TANK

Constituent	Percentages Required by MIL-P-7254E	Sample, percent (w/o)
Nitric Acid (HNO_3)	81.6 to 84.8	77.3
Nitrogen Dioxide (NO_2)	14.0 ±1.0	21.0
Water	1.5 to 2.5	1.6
Hydrogen Fluoride (HF)	0.7 ±0.1	0.02
Total Solids as Nitrates	0.1 maximum	0.05
Density (gm/ml), at 60 F	1.564 to 1.575	1.5*

*Sample too small for accurate measurement

The reaction which promoted this change was:

$$Al + 6HNO_3 \longrightarrow 3NO_2 + 3H_2O + Al(NO_3)_3 \qquad (1)$$

It can be seen that the aluminum reacted with the nitric acid (HNO_3) to produce nitrogen dioxide (NO_2), thus, reducing the HNO_3 content and increasing the NO_2 content.

Changes such as those previously mentioned are best evaluated in a storability program where the propellant is exposed to the candidate tankage materials and, pressure, temperature, and propellant composition changes are monitored for extended periods of time.

EFFECT OF CORROSION AND/OR REACTION PRODUCTS ON SYSTEM OPERATION

Minor corrosion of almost any metallic material in long-term contact with most propellants can be expected. The corrosion products may have various forms. Typical modes of corrosion product buildup on a propellant tank wall are depicted in Fig. 1.

In storable propellant systems, the propellants will, in general, contact the walls of the propellant tanks or walls of some expulsion device. In some cases, propellants will also contact the inlet side of control valves; in these areas, generation of corrosion products can be expected.

As shown in Fig. 1, the buildup of corrosion products on a tank wall can take a number of forms. In some cases, the buildup will be almost linear with time. In diffusion-controlled corrosion processes, as the corrosion product thickness increases, the rate of buildup decreases as a result of the formation of a diffusion barrier. In a cyclic buildup, corrosion products will deposit to a certain critical thickness above which the forces holding the corrosion product to the wall are overcome by gravity forces, and the corrosion products slough off the wall. Further buildup

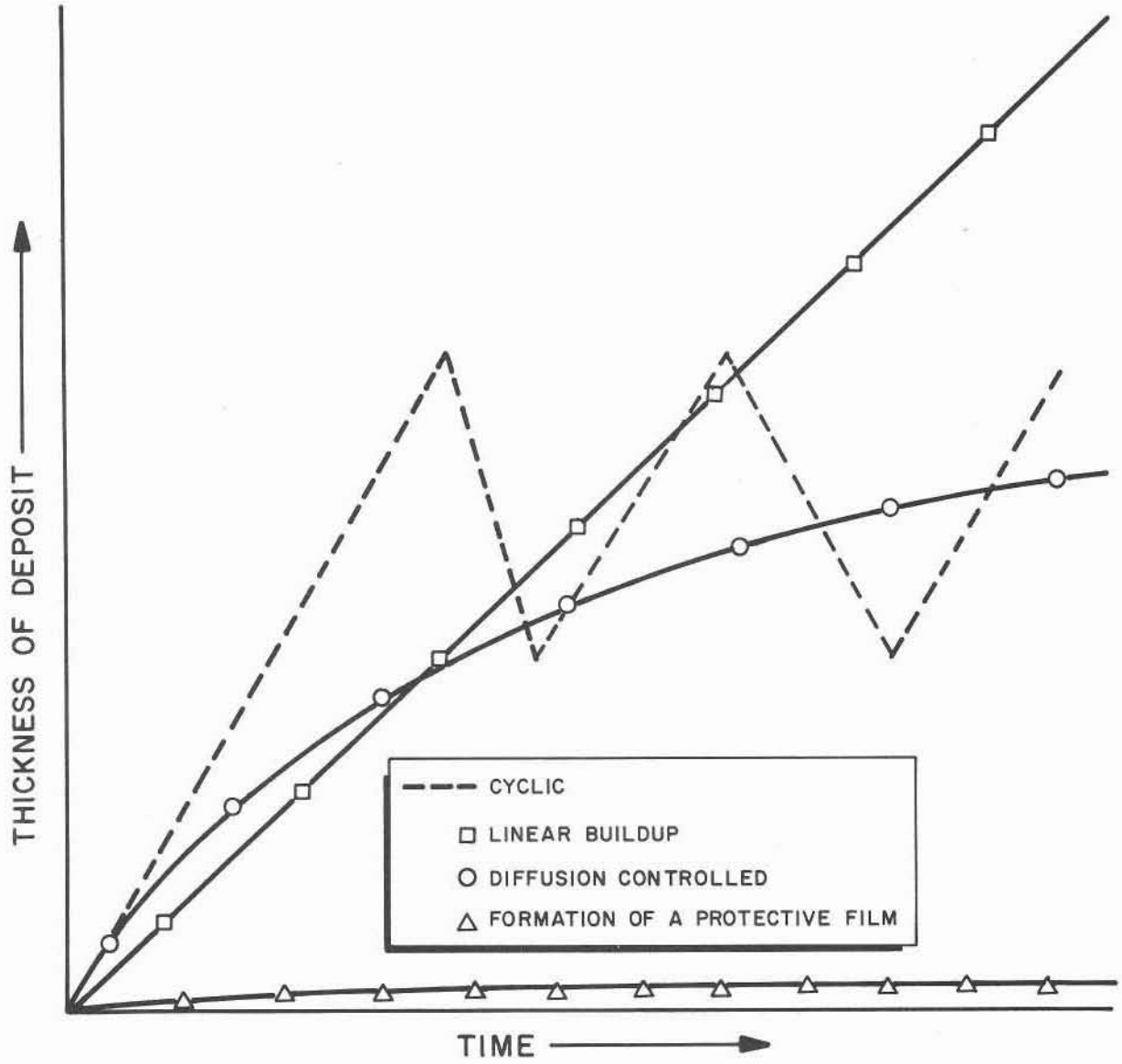

Figure 1. Typical Buildup of Corrosion Products on a Propellant Tank Wall

occurs and the process is repeated, resulting in an accumulation of corrosion products at the bottom of the tank. For some material-propellant combinations, a protective film is formed which inhibits further reaction.

Corrosion products can affect system operation by interfering with propellant flow, plugging orifices, jamming valves, and interfering with the operation of seals. In studying the effect of corrosion products, several aspects should be considered:

1. Size, amount, and distribution of corrosion products
2. Nature of corrosion-product formation
3. Adherence qualities of the corrosion products under conditions of propellant flow, vibration, and gravity forces
4. Effects of (1), (2), and (3) on propulsion system operation

PROPELLANT COMPATIBILITY TEST METHODS

As mentioned in the Introduction, a large portion of the propellant compatibility data generated to date is not applicable to the selection of materials for liquid rocket propulsion systems. Many of the deficiencies occur through oversight such as not recording the heat treatment of an alloy, not recording the composition of materials tested, giving an incomplete description of welding or brazing processes or inadequate metallographic examination of test specimens.

The primary deficiencies in propellant compatibility testing arise from the test methods used and the test specimen evaluation techniques utilized in evaluating the specimens. Some of the problems inherent in compatibility testing are discussed in the following paragraphs. The emphasis in this section is on the testing of metallic materials.

IMMERSION TEST METHODS

Unwelded-Unstressed Metallic Specimens

Static immersion of unstressed test specimens in the propellant is the most commonly used test to evaluate materials for contact with liquid propellants. Testing via static immersion in the propellant will not, however, reveal how a metallic or nonmetallic material will behave under mechanical impact, stress, or in flowing propellant.

Static immersion testing should involve exposure of the material under test to the liquid and vapor phases of the propellant as well as the liquid-vapor interface. With proper test specimen (metallic specimens) fabrication, these three variables can be investigated with one specimen. Investigation of these three variables is of particular importance when evaluating metallic specimens since corrosion processes are effected by concentration gradients and dissolved gases.

The most common method of evaluating metallic specimens subjected to static immersion in the propellant is to measure the weight loss. A knowledge of the surface area of the specimen, its density, and the duration of the test allows calculation of the corrosion rate in mils per year (mpy) or in inches per year (ipy). At this point, a gross misinterpretation of the results can occur. Calculation of corrosion rates by weight loss measurements is valid only when general corrosion of the test specimen has occurred and all of the corrosion products have been removed from the specimen. As shown in Fig. 2, corrosion can take a variety of forms. General corrosion (Fig. 2a) may be described as corrosion which results in uniform metal loss from the surface. The photomicrographs in Fig. 3 show that various forms of corrosion may occur on the same specimen. It is impossible to visually ascertain what mode of corrosion has taken place on a specimen. This can only be determined by metallographic examination such as that used on the specimens shown in Fig. 3. Thus, in regard to the calculation of corrosion rates by weight loss measurements, it can be stated: use of weight loss measurements to calculate corrosion rates is valid only when general corrosion (Fig. 2) has occurred as verified by metallographic examination and all traces of the corrosion products have been removed from the specimen prior to weighing.

Another area that requires mention is in the reporting of specimen weight changes. For metallic materials, a weight gain signifies that corrosion has occurred and that the corrosion product has adhered to the specimen. Since many corrosion products are hydroscopic, i.e., metallic fluorides, a portion of the weight gain can be caused by subsequent hydration after exposure. In cases when only the weight gain for a particular specimen has been reported, no conclusions can be drawn as to the extent of corrosion, and thus the data cannot be used for design purposes.

In summary, weight changes in metallic specimens exposed to a propellant are useful to determine corrosion rates and effects only if supporting metallographic examination is conducted. Where weight gains or losses are encountered, it is necessary to either remove the corrosion product or relate the reduced specimen thickness to its original dimensions.

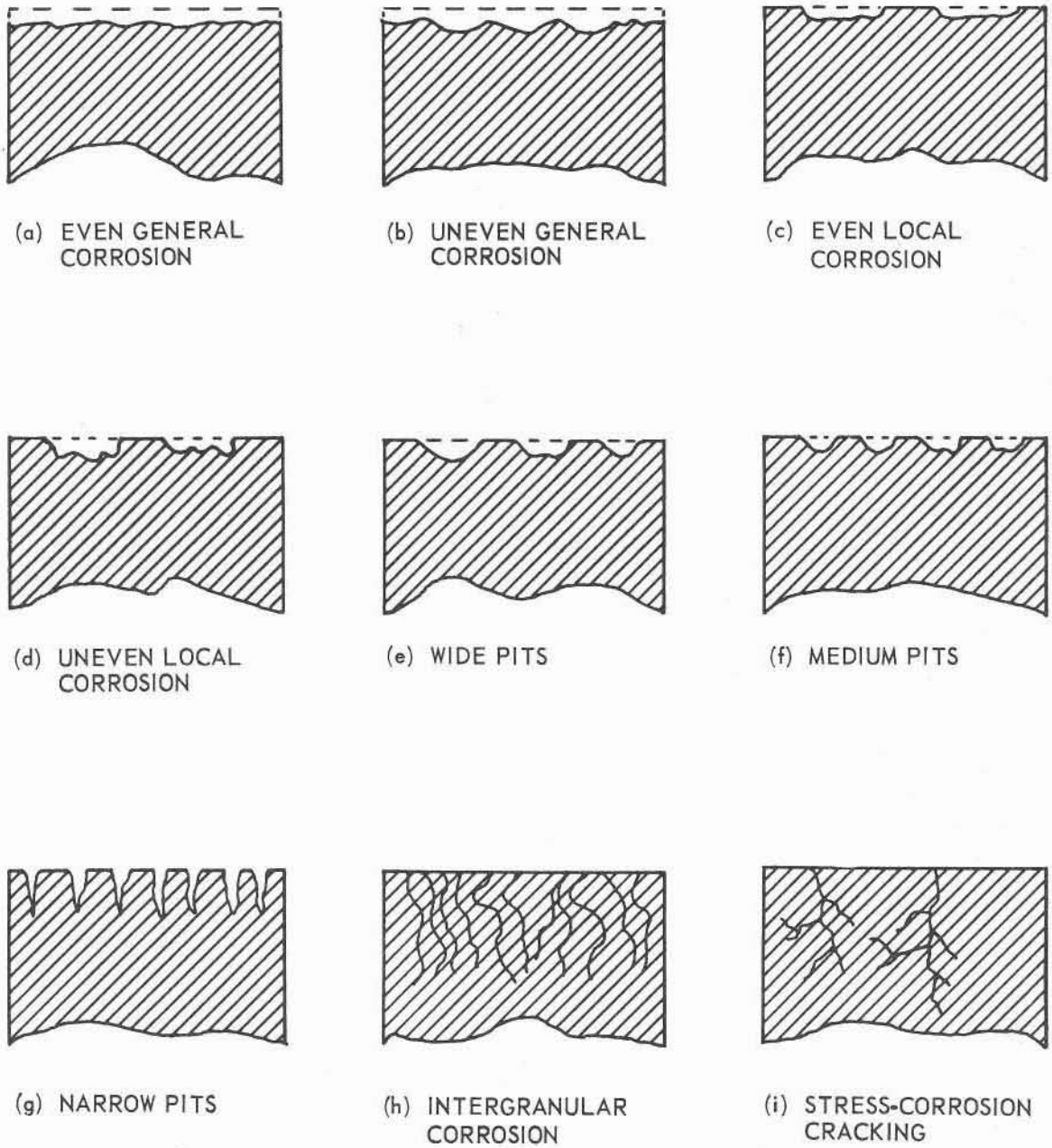

Figure 2. Schematics Showing Various Types of Corrosion

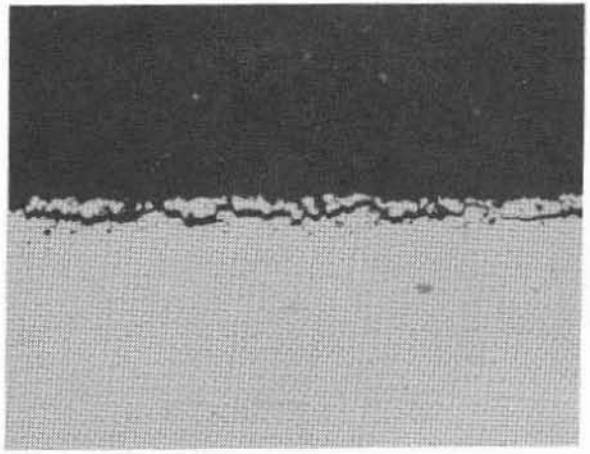

Intergranular Corrosion
(17-7 PH Stainless Steel)

Stress-Corrosion Cracking
(Ti-5Al-2.5Sn)

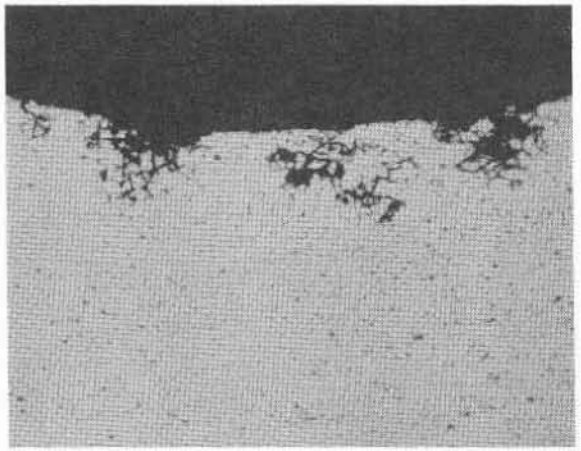

Pitting and Intergranular Corrosion
(6061-T6 Aluminum)

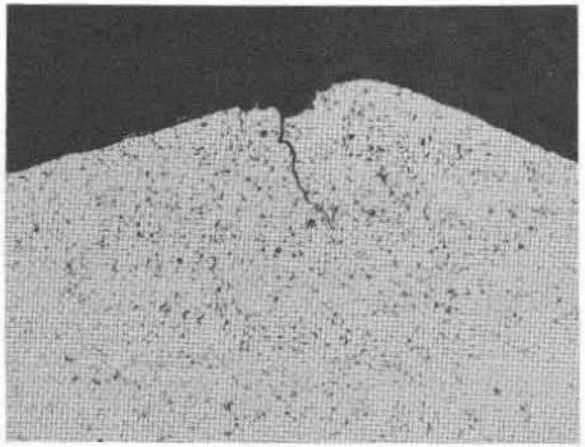

Pitting and Stress-Corrosion Cracking
(2024-T4 Aluminum)

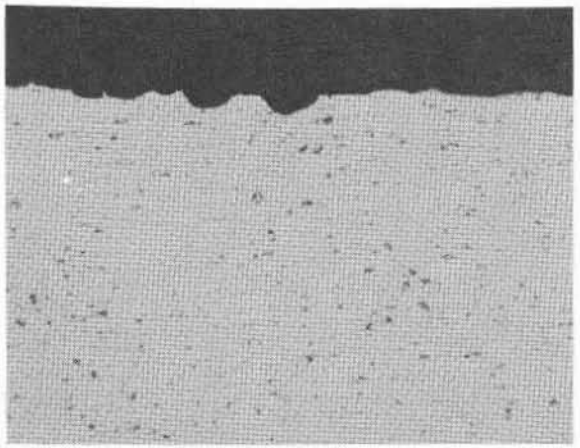

Pitting
(6061-T6 Aluminum)

Figure 3. Photomicrographs Showing Various Forms of Corrosion

An alternative to the use of weight loss to determine corrosion rates is the use of tensile specimens which are exposed to the propellant and subsequently pulled to determine changes in the mechanical properties of the material. Typical tensile specimens used for static immersion testing at Rocketdyne are shown in Fig. 4 and 5. The use of tensile specimens for static immersion testing has considerable merit. Corrosion and its effect on a material can be quantitatively measured with respect to changes in the yield strength, ultimate strength, and elongation. The effects of corrosion having forms other than general corrosion can be determined. This is not possible by weight loss measurements. For example, intergranular corrosion will result in little loss of material. However, this mode of corrosion will have a pronounced effect on the mechanical properties of the material.

A knowledge of changes in the mechanical properties of a material due to corrosion can be directly related to the design criteria, and appropriate steps can then be taken to alter the design so that corrosion will not affect the function of the hardware under consideration. Typical compatibility data of this type are shown in Fig. 6.

Welded Metallic Specimens

Weld joints should be carefully evaluated, since a number of variables are inherent in this method of metal joining. Weld specimens must be subjected to metallographic examination to determine the mode and extent of corrosion. These tests should be supplemented with tensile tests of the weld specimens to determine if any changes in the mechanical properties have occurred.

Figure 7 shows the cross section of a typical weld. The three zones shown in the figure should be carefully examined for evidence of attack. A corroded titanium weld joint resulting from exposure to red fuming nitric acid is shown in Fig. 8. Some of the shortcomings in reporting test data for welded specimens in the literature have been:

1. Unknown composition of the filler metal (weld rod)

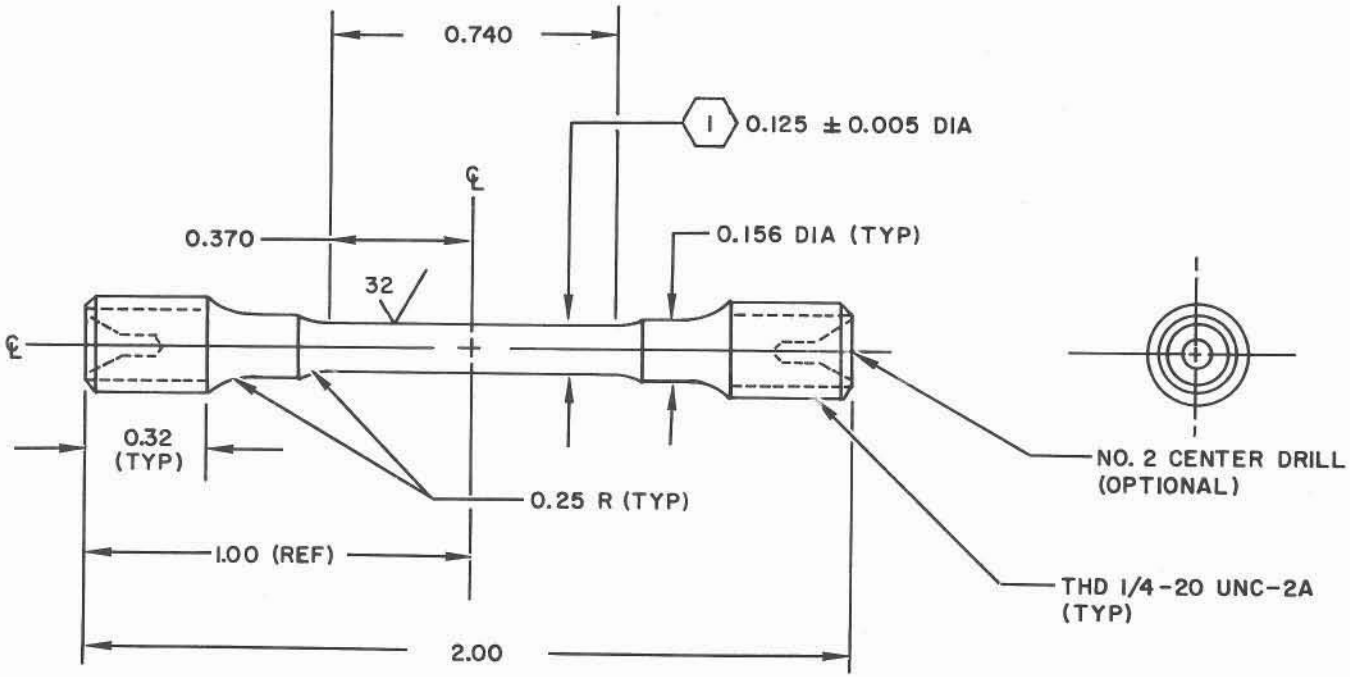

Figure 4. Typical 1/8 Inch Round Tensile Bar

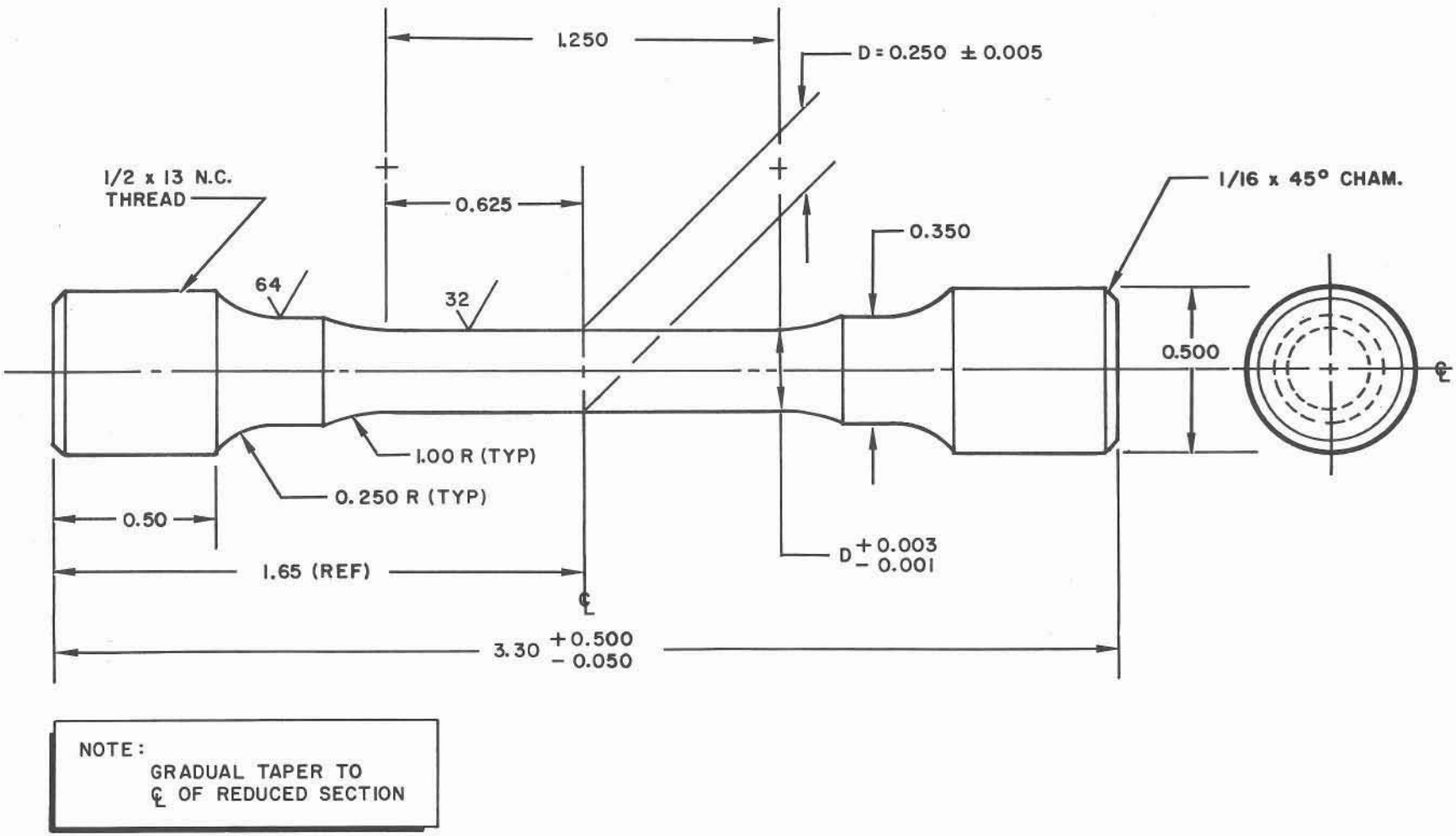

Figure 5. Typical 1/4 Inch Round Tensile Bar

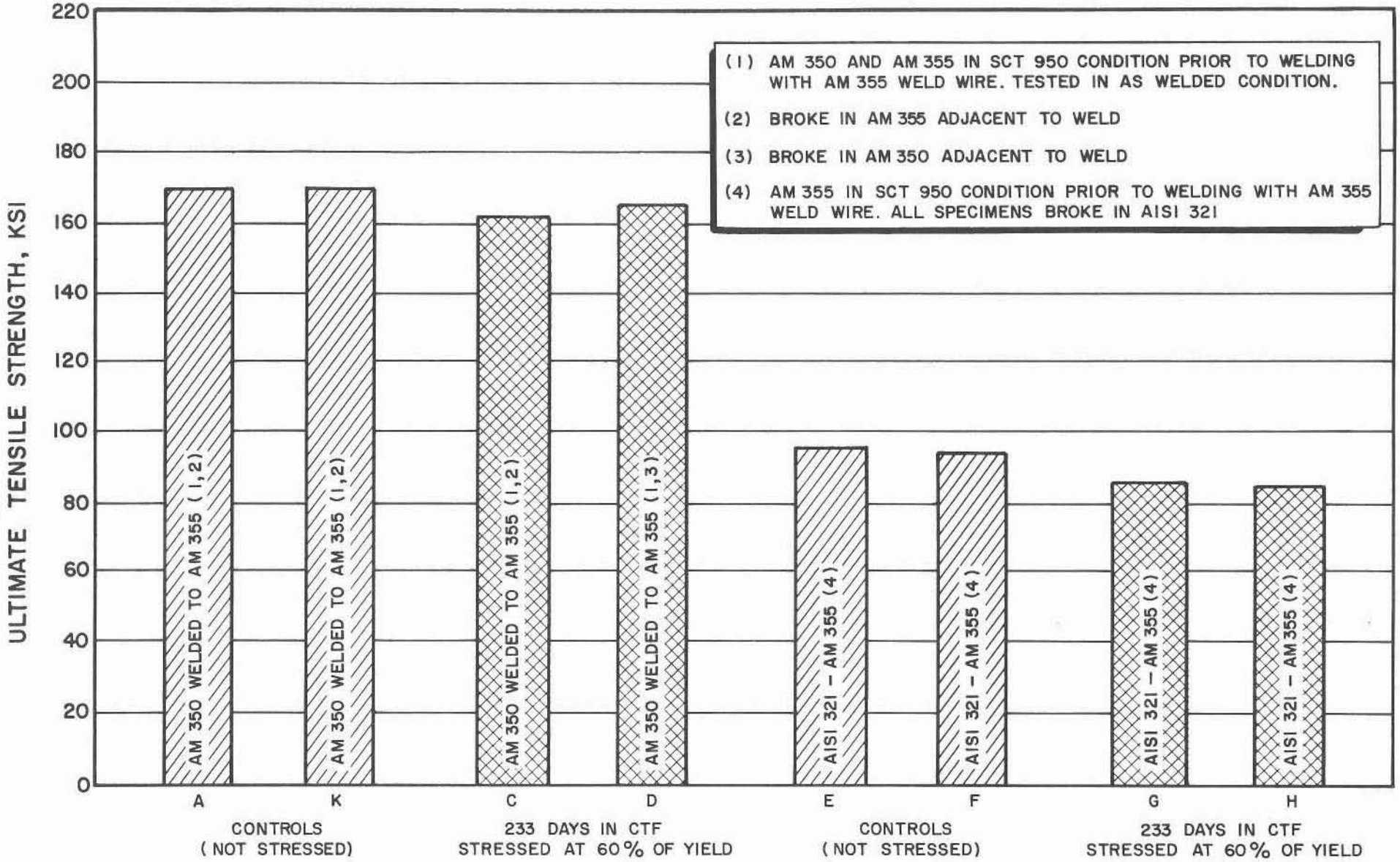

Figure 6. Ultimate Tensile Strength of Welded and Stressed Stainless Steel Tensile Specimens After Exposure to CTF

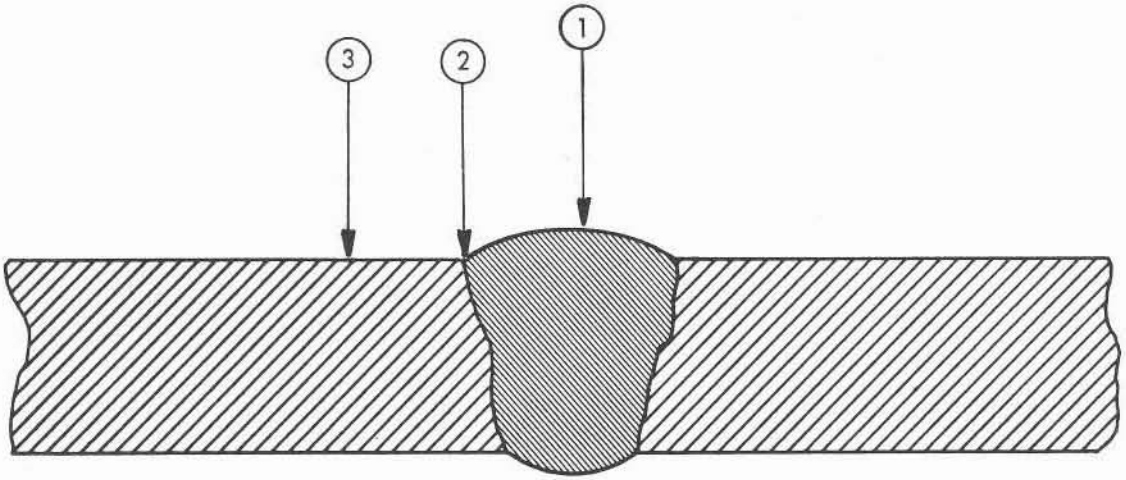

1 FILLER METAL

2 DIFFUSION ZONE (BASE METAL AND FILLER METAL)

3 HEAT AFFECTED ZONE

Figure 7. Typical Cross Section of a Weld

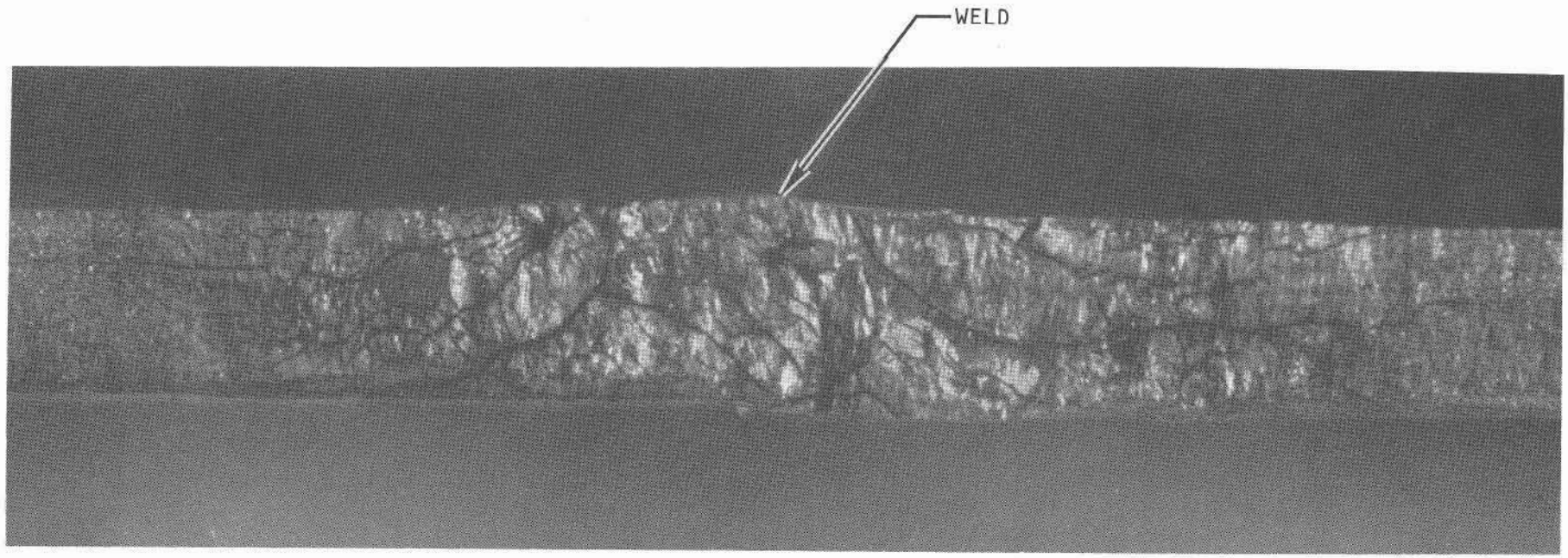

Figure 8. Welded Commercially Pure Titanium After Exposure to Red Fuming Nitric Acid

2. No metallographic examination of specimens

3. Changes in mechanical properties caused by exposure to the propellant not determined

In reporting data pertaining to weld specimens, the type of welding used and the configuration of the weld joint should be recorded. Many unstressed weld specimens have high residual stresses dependent upon the original specimen configuration. Whether the specimens are tested in the as-welded or welded plus heat-treated condition should also be recorded, since heat treatment after welding can greatly alter the corrosion properties of the weld joint.

Examination and Analysis of Corrosion Products

Corrosion products on metallic test specimens subjected to immersion in a propellant should be characterized. Such characterization should include:

1. Identification of corrosion products using X-ray diffraction, spectrography, electron microprobe X-ray analysis, and wet chemical methods of analysis

2. Assessment of physical characteristics of reaction product layers, particularly:

   a. Thickness

   b. Molal volume

   c. Adherence

3. Evaluation of the relationship of (1) and (2) on system operation

Corrosion rates are dependent upon the corrosion product formed at the surface of a corroding metal. Identification of the corrosion products allows for identification of particular reactions taking place and can provide information useful in evaluating inhibitors to reduce or eliminate

corrosion. Many corrosion products will undergo compositional changes upon removal from the propellant. Examples of this phenomena are fluoride compounds which normally become hydrated upon exposure to the atmosphere. Figure 9 shows an aluminum alloy corrosion product removed from a propellant tank which contained inhibited red fuming nitric acid. The corrosion reaction of IRFNA and aluminum proceeds as shown in Eq. 1.

Exposure to the atmosphere results, however, in the hydrated aluminum nitrate decomposing to yield aluminum oxide. Thus, to properly identify the reaction product of aluminum and IRFNA requires in situ analysis. The degree of protection provided by reaction product formation is dependent upon diffusion and kinetic considerations. In general, reaction products will form a protective barrier toward further corrosion if the ratio of the specific volume of the reaction product to the specific volume of the metal is greater than 1.0. This relationship may be expressed by:

$$\frac{M' \, d}{m \, n \, D'} > 1 \qquad (2)$$

where

M' = reaction product molecular weight, gm/mole
d = metal density, gm/cm^3
m = metal atomic weight, gm/mole
n = number of metal atoms in the reaction product
D' = reaction product density, gm/cm^3

The optimum ratio lies between 1.2 to 1.7. At lower ratios, the reaction layers will be porous; and, at higher ratios, they will crack due to compressive stresses. Normally, protective films and reaction product layers range in thickness from several angstroms [10^{-8} cm/Å] to several microns [10^{-4} cm/μ]. Thicker reaction product layers while not being fully protective due to porosity do reduce the overall rate of corrosion. One drawback to this situation is that anodic areas (those undergoing corrosion) become decreased, hence, the cathode-to-anode area ratio increases which can lead to localized pitting on the metal surface.

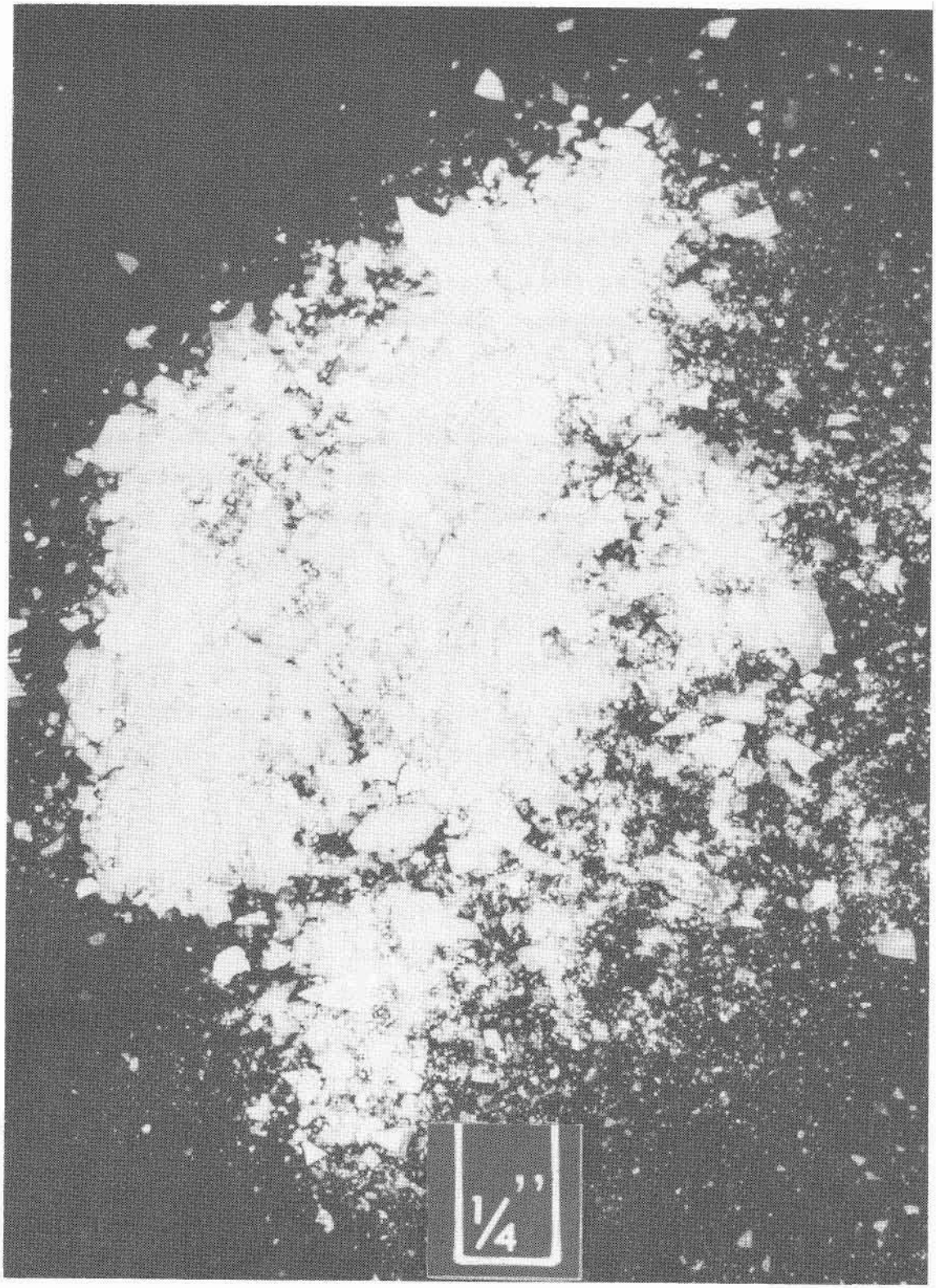

Figure 9. Aluminum Alloy Corrosion Products Removed From an Inhibited Red Fuming Nitric Acid Propellant Tank

As shown in Fig. 1, the adherence qualities of corrosive products are important particularly where large surface areas are involved. In these cases, nonadherence of corrosive products can result in an accumulation of material, for example, at the bottom of a propellant tank which may lead to restriction of flow. The size of corrosive products should be determined and considered where propellant flows through small orifices or where potential contamination problems exist with close tolerance hardware.

A record of corrosion products encountered during specimen testing provides a backlog of information for identification of corrosion products which may later be encountered during propulsion system operation and test.

Nonmetallic Materials

Nonmetallic materials used in the fabrication of liquid rocket engine hardware fall into four basic categories: ablatives, lubricants, elastomers, and plastics.

Ablatives normally will not contact liquid propellants during operation and immersion testing is usually conducted to determine the effects of propellant spills or leaks. Such testing is oriented to determine gross changes in the material such as excessive reaction, solubility, or loss of strength.

Lubricants are normally screened by exposure to the liquid and vapor phases of the propellant and gross changes such as excessive reaction or solubility determined. If the propellant is cryogenic, further tests are necessary to determine if the lubricants will function at low temperatures. Final selection of a lubricant after it has passed initial screening tests is determined by dynamic testing.

Static immersion of elastomers and plastics involves determination of the percentage volume swell, retained hardness, retained sealing properties, compression set, and retained mechanical properties. In addition,

plastics will be evaluated for change in the compressive creep and stress relaxation in the propellant. It should be emphasized that the previously mentioned properties may be time dependent with respect to removal of the material from the propellant. To establish the existence of time dependency, properties should be measured immediately following removal from the propellant and then measured again at a later date. Comparison of the data will indicate whether the properties are time dependent with respect to removal from the propellant. Normally, time dependency of elastomers and plastics is related to solvency effects of the propellant. Changes due to solvency effects are usually recoverable. Effects independent of time are usually caused by chemical changes due to exposure to the propellant such as depolymerization and are normally nonrecoverable.

Changes in the mechanical properties of elastomers and plastics can be quantatively determined by use of tensile specimens fabricated from the material to be tested. Typical nonmetallic tensile specimens are shown in Fig. 10. These same specimens can be stressed to determine if the material (plastic) is susceptible to stress-crazing; a cracking phenomena which appears similar to the stress-corrosion cracking of metals.

Effects of the Materials Upon the Propellant

During immersion testing of candidate materials in the propellant, consideration should be given to possible effects the materials may have on the propellant. Such changes are usually caused by decomposition of the propellant or composition changes due to reaction with the materials under test. Decomposition can be monitored by measuring pressure changes as a function of exposure time. Figure 11 shows a typical tank with a pressure gage used to contain specimens for static immersion test. Compositional changes are assessed by chemical analysis of the propellant before and after the test. Compositional changes will sometimes be detected by changes during test, but, if the gaseous products are significantly soluble, such changes may not be detected.

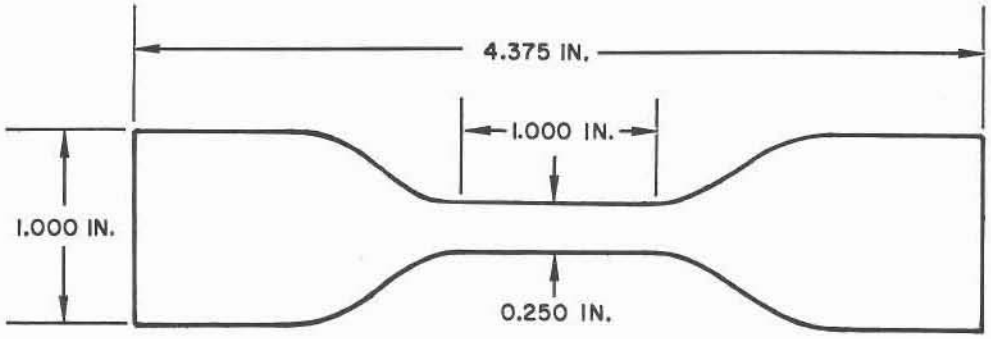

ASTM DIE C

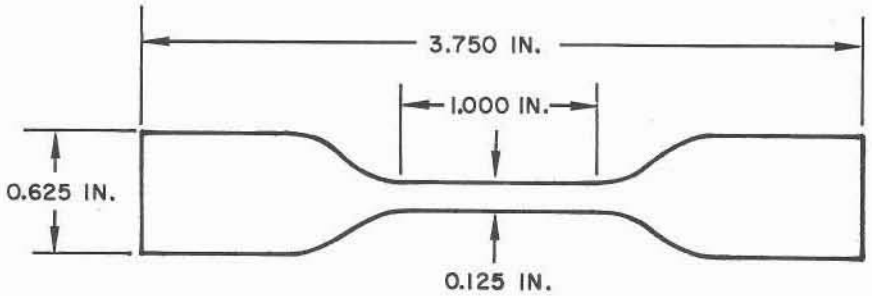

ASTM DIE D

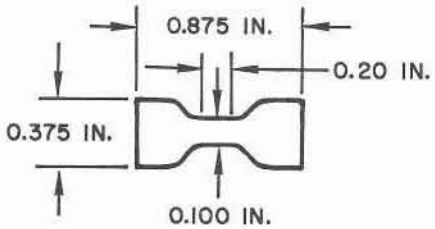

MICRO DIE

Figure 10. Typical Nonmetallic Tensile Specimens

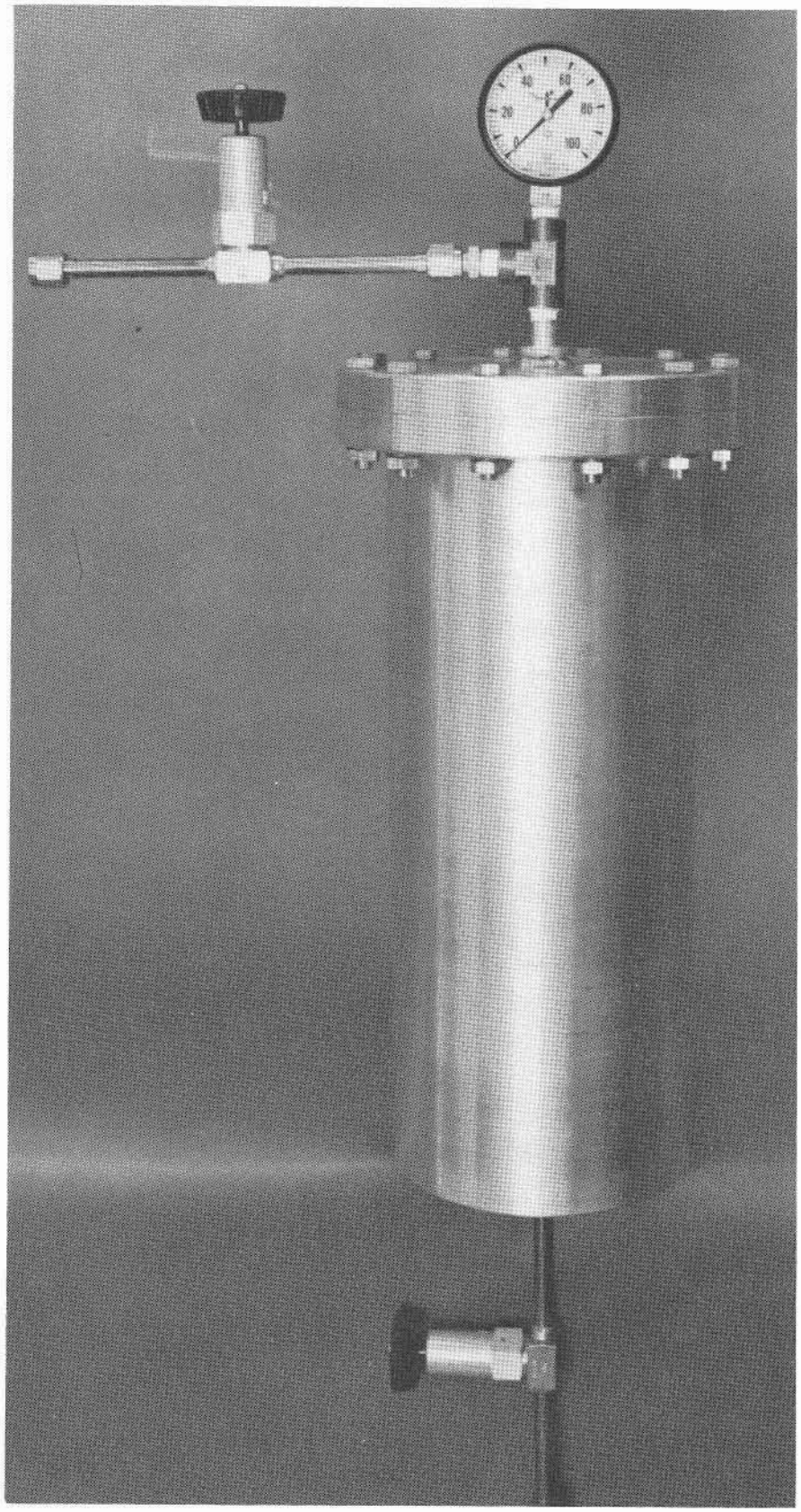

Figure 11. Propellant Tank Used to Hold Propellant Compatibility Test Specimens

Changes in the propellant due to contact with certain materials are important because gaseous by-products of a reaction may cause excessive pressures; and changes in the composition will affect the specific impulse, and hence, affect mission capability.

TESTING FOR SUSCEPTIBILITY TO STRESS CORROSION

Use of Bent-Beam and U-Bend Stress-Corrosion Specimens

A number of investigators have utilized bent-beam and U-bend specimens to determine the susceptibility of a material to stress-corrosion cracking in a particular propellant. Although specimens of these types are relatively simple to fabricate and use, their stress analysis is quite complex. These specimens are shown schematically in Fig. 12.

(a) BENT-BEAM SPECIMEN (b) U-BEND SPECIMEN

Figure 12. Bent-Beam and U-Bend Specimens

In bent-beam specimens, the deflections are usually large when compared to the specimen thickness. Thus, the simplified small-deflection theory commonly used to solve column-buckling problems is not applicable. Therefore, to obtain the value of maximum tensile stress, it is necessary to utilize large-deflection theory. G. Haaijer and A. W. Logenow (Ref. 4) recently presented this theory applied to the bent-beam specimen depicted in Fig. 12. Results of their analyses are summarized here to show the complexity of the analysis.

To determine the strain,

$$\epsilon = \frac{\sigma}{E} \tag{3}$$

where

ϵ = strain

σ = required stress

E = modulus of elasticity

To determine the length (L) of a specimen of known thickness (t) to be stressed in a specimen holder with the distance (H) between the supports to produce the required strain (ϵ) necessitates the solution of the following equations:

$$\epsilon = \frac{\sigma}{E} = 4 \left[2E(k) - K(k) \right] \left[\frac{k}{2} - \frac{2E(k) - K(k)}{12} \left(\frac{t}{H} \right) \right] \frac{t}{H} \tag{4}$$

$$\frac{L - H}{H} = \frac{2[K(k) - E(k)]}{2E(k) - K(k)} \tag{5}$$

$$\frac{Ym}{H} = \frac{k}{2E(k) - K(k)} \tag{6}$$

where

$$E(k) = \int_0^{\pi/2} \sqrt{1 - k^2 \sin^2 u}\, du$$

$$K(k) = \int_0^{\pi/2} \frac{du}{\sqrt{1 - k^2 \sin^2 u}}$$

$k = \sin \theta_0/2$

Ym = maximum specimen deflection

θ_0 = maximum slope of specimen (at X = 0)

u = dummy variable

Haaijer and Logenow express Eq. 5 and 6 in parametric form and show the relationships graphically to simplify calculation (Ref. 4). It is obvious that to test a material at several different stress levels would necessitate fabricating specimens of different lengths and/or thicknesses or varying the specimen holder distance. To determine the maximum tensile stress in a U-bend specimen requires a similar complex analysis. In other words, the use of either type specimen requires a complex analytical treatment to determine the maximum tensile stress and variation in specimen geometry to cover a range of stress levels.

The major shortcoming of the use of these specimens in propellant compatibility testing has been that the maximum tensile stress of the specimens is not determined. Hence, data for specimens of this type are usually accompanied by such statements as, "the specimens were stressed below their yield point," or, "the specimens were stressed near their yield point." If a specimen thus described fails because of stress-corrosion cracking, it can then be stated that the material tested is susceptible to stress-corrosion cracking in the propellant in which it was tested. Further information is not available. If the material does not fail, it cannot be stated that the material is immune to stress-corrosion cracking since the maximum tensile stress is unknown.

It is well known that stress-corrosion cracking of a susceptible material is a function of the tensile stress and duration of testing. As the level of tensile stress decreases, the time to cracking (appearance of the first crack or failure) increases. Thus, a knowledge of the tensile stress to which the material was subjected is required in making a judgment regarding an unfailed specimen.

Another problem with specimens of this type occurs in loading to a stress level (below the yield point of the material) where room temperature creep is encountered. Obviously then, the behavior of the material near its yield point must be known, and the amount of tensile stress applied to the specimen must be measured (usually as a percentage of the yield strength) and recorded. In the event of room temperature creep, the

geometry of specimens of this type does not lend itself to a quantitative measurement of small changes in dimension necessary to identify the onset of creep.

Axially Loaded and Restrained, Stress-Corrosion Specimens

To circumvent the problems previously discussed, the use of axially loaded and restrained, stress-corrosion specimens for stress-corrosion testing is highly recommended. Although flat tensile specimens (fabricated from sheet or plate stock) can be utilized in this type of testing, round bars are preferred since edge effects do not have to be considered and the bars are usually cheaper to fabricate. Typical round tensile bars used for this type of testing are shown in Fig. 4 and 5. A stressed tensile specimen is shown in Fig. 13.

In this figure, it can be noted that the stressing frame is simply constructed consisting of a U-shaped frame, head, two nuts, and two bolts machined to accommodate an allen wrench. To load a tensile specimen it is only necessary to position the bar in the frame, adjust the nuts until the bar is firmly held, and torque the bolts until the desired stress level is achieved. The stress level is determined by attaching a strain gage to the bar and and loading until the strain coincides with the desired stress; the stress-strain relationships being predetermined from testing of control specimens.

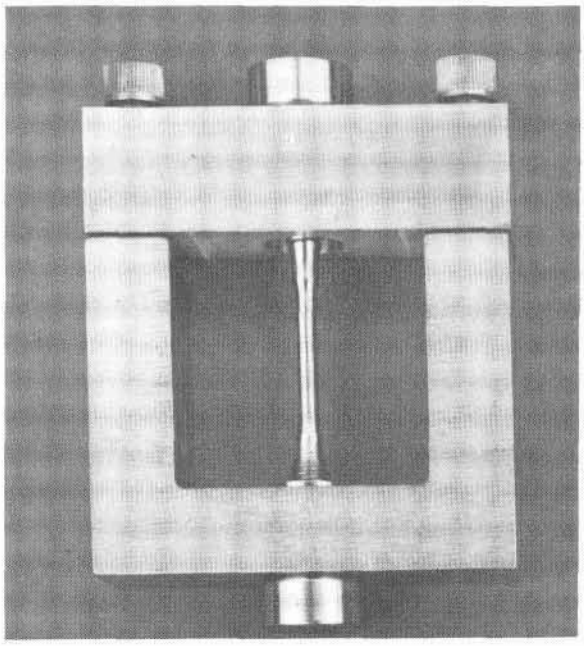

Figure 13. Tensile Specimen and Stressing Frame

To preclude galvanic effects, the frame materials should be constructed from the same alloy which is to be tested. If this is not feasible (limited test material or cost), a stressing frame material should be selected which minimizes the potential difference (emf) between the frame and the material to be tested.

For initial testing, stress levels should be selected approaching the yield strength of the material. Recalling the previous discussion, selection of high stress levels will reduce the time to failure for susceptible material-environment combinations. A stress of approximately 70 to 80 percent of the yield strength is usually satisfactory for initial testing. A check should be made to see that the initial stress level selected does not induce room temperature creep. If it is desirable to determine the stress time-to-failure characteristics for a susceptible material-environment combination, further tests can be conducted at decreasing stress levels.

At the termination of testing, all unfailed tensile specimen should be pulled to determine if changes in the mechanical properties have occurred because of exposure to the propellant. It is possible, for example, that a specimen removed from the test environment may have partially cracked, although the crack may not be visible.

FLOW TESTING

Where high-velocity flow of corrosive propellants is anticipated, flow tests to evaluate possible erosion-corrosion mechanisms should be conducted. Where corrosive propellants are to be used for regenerative cooling, such testing is particularly important because reaction product films may effect the tube-wall heat-transfer coefficient. Apparatus designed by Rocketdyne (Ref. 5) and used to evaluate N_2O_4 for possible regenerative cooling of thrust chambers is described in the following paragraphs. This apparatus can serve dual purposes: (1) acquisition of heat transfer data, and (2) determination of erosion-corrosion effects under conditions of variable temperature, pressure, and velocity.

The heat transfer experiments (Ref. 5) were performed by flowing high-pressure nitrogen tetroxide (N_2O_4) through electrically heated metal tubes. A high-pressure, closed blowdown flow system was operated from a concrete blockhouse. Remote control equipment permitted control of the test variables and the recording of the experimental data.

The flow system consisted of an electrically heated test section inserted in a flow line between two tanks (Fig. 14). A high-pressure, stainless-steel run tank with a volumetric capacity of approximately 250 gallons and a 4000-psig-maximum operating pressure was pressurized with gaseous helium to force the fluid through the test section into a low-pressure, 250-gallon catch tank. When the high-pressure tank was emptied, the fluid from the catch tank was recycled to the high-pressure tank, and the procedure repeated. The low-pressure catch tank was pressurized with nitrogen gas for the recycle portion of the flows.

During actual testing, N_2O_4 passed through a turbine flowmeter and a bulk temperature-measuring, mixing chamber before entering the test section. Upon leaving the test section, the mixed bulk temperature was measured again. The fluid then passed through water-cooled heat exchangers to remove the sensible heat absorbed by the fluid in the test section and then through a flow-control valve. By adjusting the opening of the flow-control valve and the run tank pressure, independent pressures and flowrates were obtainable in the test section.

All the test sections used had a nominal 0.250-inch OD and 9- to 15-inch heated lengths. Figure 15 illustrates the test section geometries and the placement of the instrumentation for both the 9- and 15-inch heated test sections. Copper bus bars were brazed to the test sections at each end of the heated lengths. These copper buses were used to attach the high-amperage cables from the power generation equipment. The heated length was considered to be the length of tubing between the bus bars. Adequate upstream, unheated lengths of tubing were provided to ensure the establishment of a fully developed velocity profile and a uniform

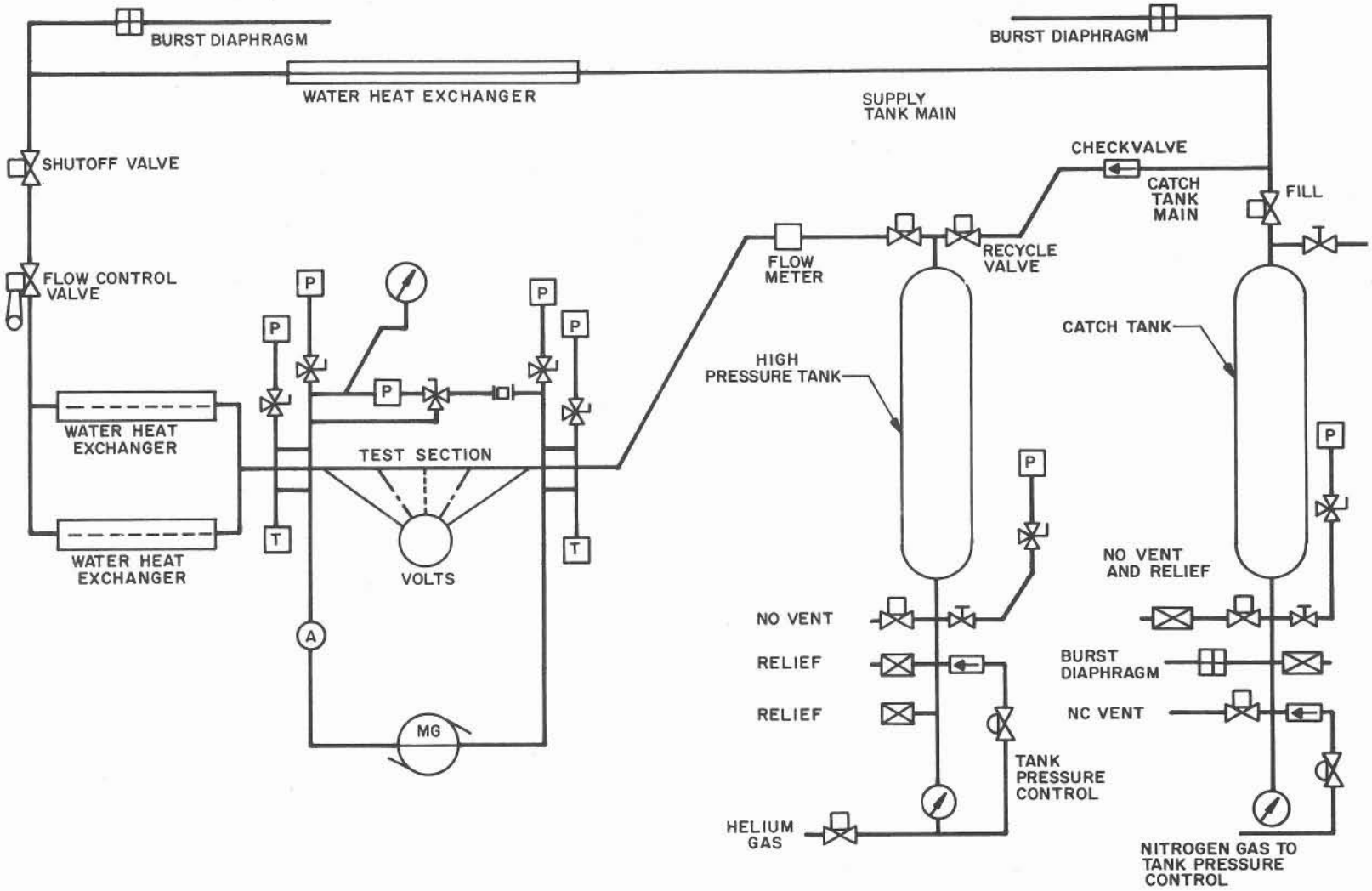

Figure 14. High-Pressure Nitrogen Tetroxide Flow System

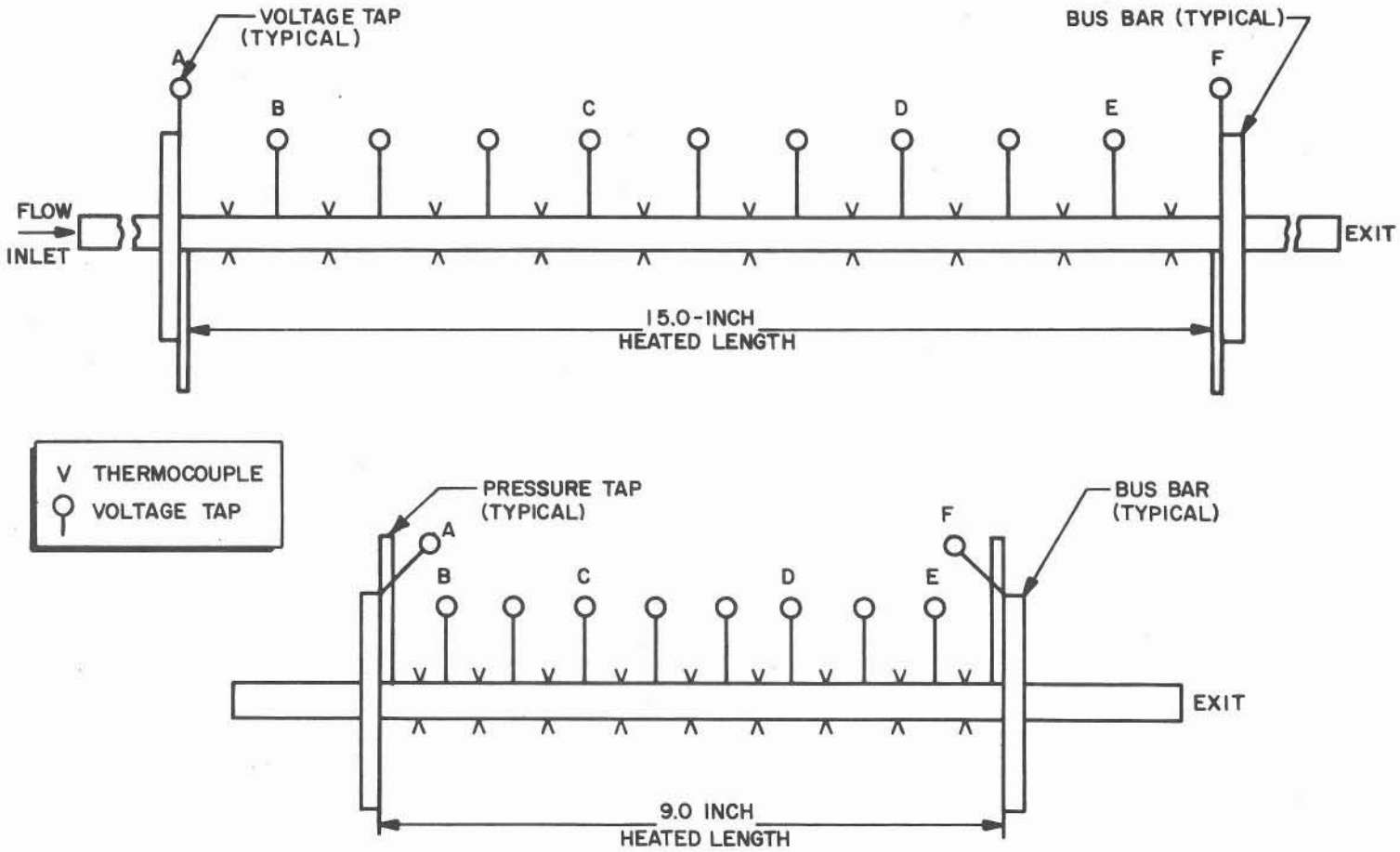

Figure 15. Test Section Configurations With Instrumentation, Nitrogen Tetroxide Heat Transfer Experiments

temperature profile before the heated portion of the test section. Adequate downstream, heated lengths were also used to prevent any downstream influence on the heat transfer and fluid flow characteristics of the heated portion of the test section.

The test sections were installed with a slip joint and spring preloading at the inlet end to compensate for thermal expansion of the test section during the heated experiments. The pressure taps were stainless-steel tubing welded over carefully drilled and polished holes in the test section wall at the ends of the heated length. The holes were drilled radially with a No. 76 drill. The copper bus bars were slotted to allow attachment of the pressure taps and to permit the heated length to start and end at the center of the pressure taps. The bus bars were then brazed to the test section, keeping the N_2O_4 contained within stainless-steel so that it would not contact the copper or the braze material.

Outer test-section, tube-wall surface temperatures were measured with thermocouples placed at designated stations along the heated length. These thermocouples were placed in diametrically opposite pairs at each thermocouple station (Fig. 15). Voltage taps were attached to the test section by capacitance welding of 0.035-inch-diameter Inconel wires to the test section surface along the heated length. There were numerous voltage increments defined by these taps to allow the power generation to be evaluated locally as well as on an overall basis along the heated length of the test section (Fig. 15). The test section was packed in special high-temperature insulation to reduce radiant and convective heat losses at the higher wall temperatures. These heat losses, while inconsequential in comparison to the heat flux absorbed by the fluid, can influence the thermocouple readings if not properly controlled. A 321 CRES test section used for the heat transfer experiments is shown in Fig. 16. The test section, is shown with the thermocouples attached as it appeared during installation in the flow system.

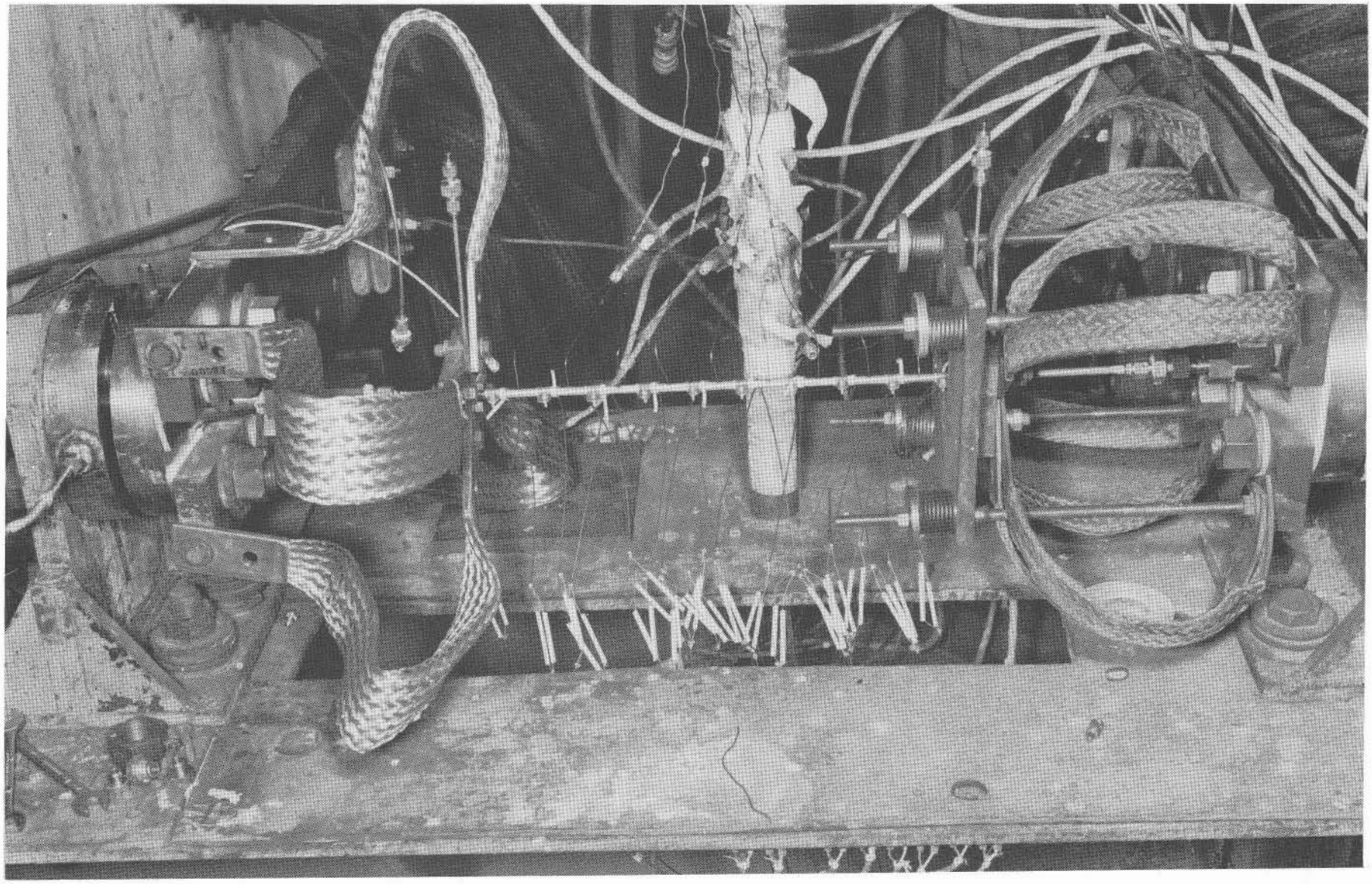

Figure 16. High-Temperature Flow Test Equipment for Evaluation of Tubing

Test sections of 321 CRES and Inconel 718 used in the referenced tests are shown in Fig. 17. It should be noted that a reaction product film was formed on the ID of the 321 CRES which was found to influence tube wall heat transfer coefficients. Other than the presence of this film, no other corrosive effects were noted during testing.

Alternate Method

The equipment previously discussed is expensive to fabricate and requires considerable instrumentation for measuring the various parameters involved. A simpler apparatus which was used to investigate erosion-impingement effects of propellants on metallic materials is shown in Fig. 18. This apparatus consists of an "AN" type fitting machined to accommodate a 1-inch-diameter orifice specimen. Four holes were drilled in the base of the fitting to accommodate four posts which held the impingement specimen. The attitude of the impingement specimen could be varied from 0 to 70 degrees. The orifice specimen was sealed with a Teflon O-ring and held in place with a snap ring to facilitate changing of test specimens. A gold-plated OFHC copper orifice specimen exposed to N_2O_4 at 100 ft/sec and ambient temperature for 10 minutes using this apparatus is shown in Fig. 19. The effects of erosion and cavitation are clearly evident on this specimen.

Erosion-corrosion processes result in higher corrosion rates since under high-velocity flow conditions, protective films and reaction product layers are swept away by the flowing propellant. These processes result in constant exposure of a fresh metal surface. The adherence qualities of protective films and reaction product layers will be dependent upon the propellant, propellant velocity, and the particular metal under investigation.

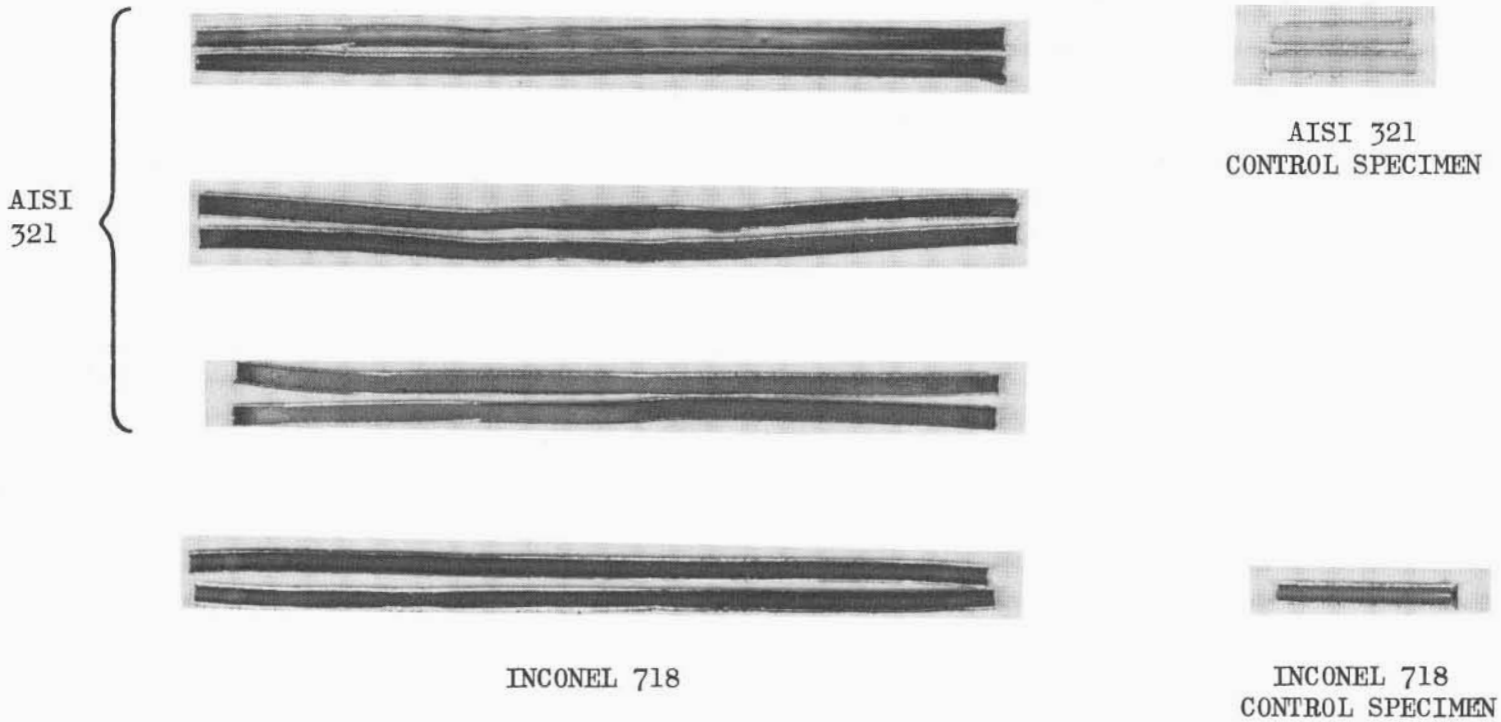

Figure 17. AISI 321 Stainless Steel and Inconel 718 Tubing Subjected to High Temperature Flow Testing With NTO

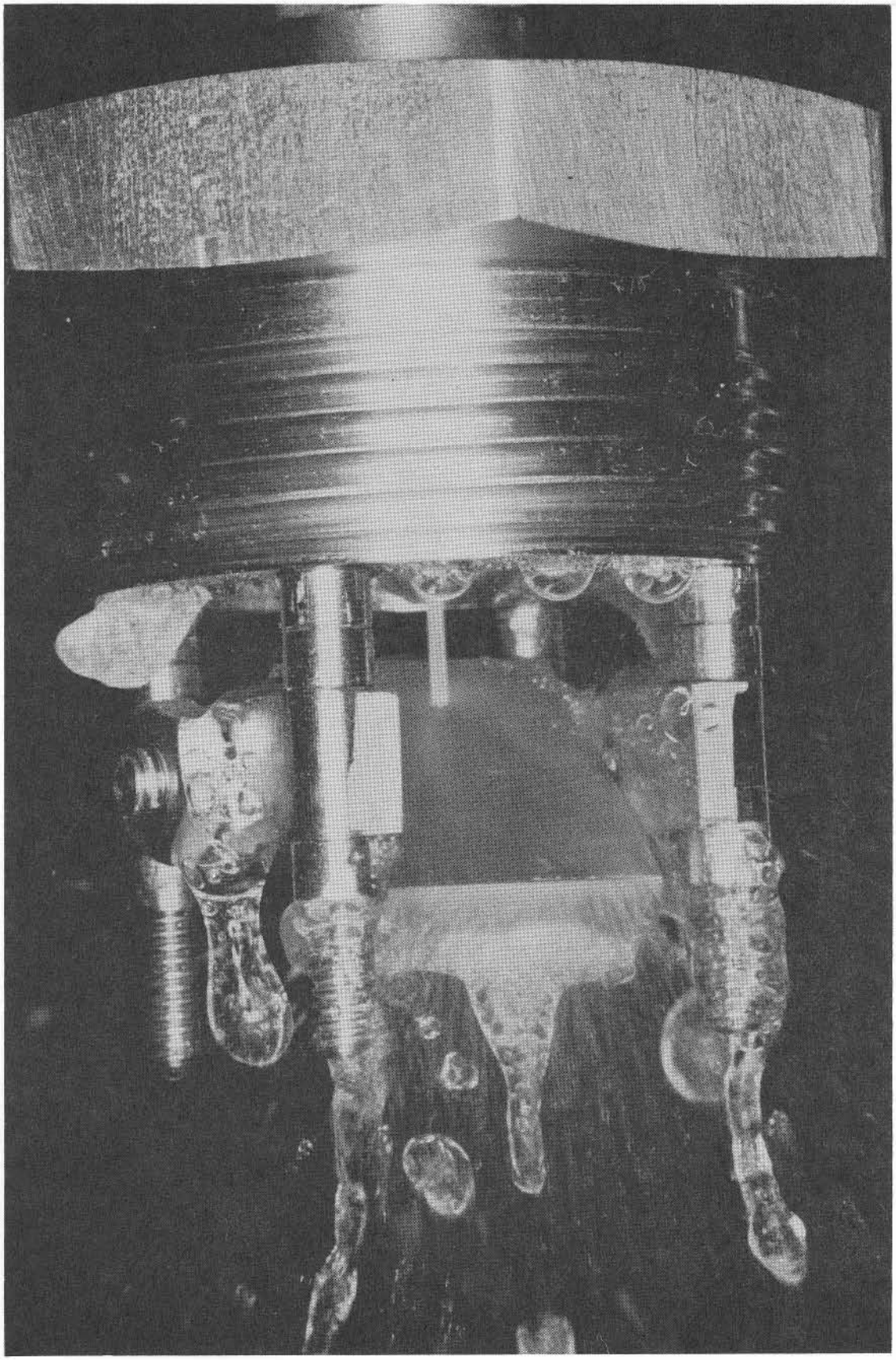

Figure 18. Fixture for Simultaneous Erosion and Impingement Testing

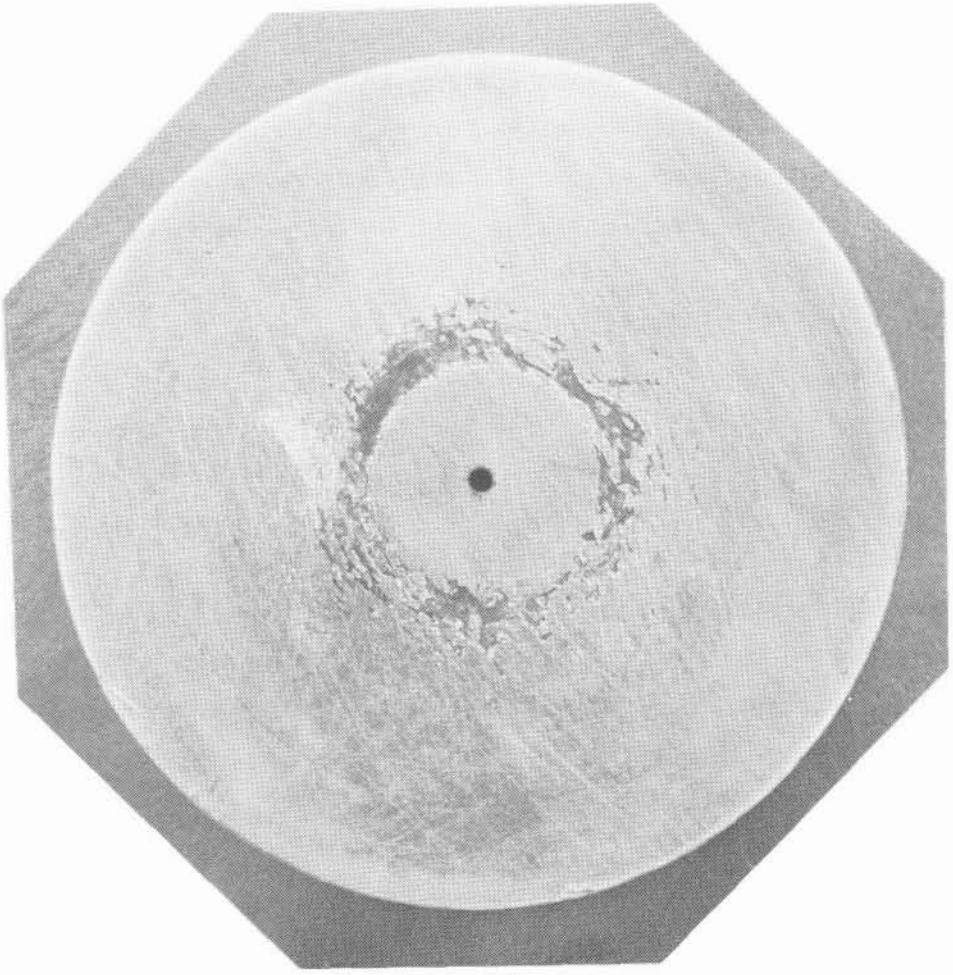

Figure 19. Gold-Plated OFHC Copper Orifice Specimen Showing Effects of Erosion and Cavitation After Exposure to Flowing NTO

IMPACT TESTING

Impact testing is a method of determining the behavior of a material-propellant combination under mechanical impact. Impact testing has been used extensively in recent years for the determination of the chemical compatibility of materials with LOX. Throughout much of the aerospace industry, it is the prime standard which must be passed before a material can be considered for use in LOX or gaseous oxygen systems.

History and Methods of Testing

The impact test, as it is presently known, has evolved from similar testing techniques used to determine the sensitivity to shock to effect ignition of high explosives and, more recently, the ignition of solid propellants. The majority of the more reliable prototype devices built and evaluated for the testing of materials with liquid propellants had maximum energy outputs on the order of 70 ft-lb. North American Aviation, Inc., developed a "drop hammer"-type device with a 68 ft-lb output. The Army Ballistic Missile Agency (ABMA) constructed a tester with an 80 ft-lb maximum capability, but used 10 Kg-M (72 ft-lb) as a prime criterion for acceptability. The Air Force, using a tester similar to that developed by ABMA, established a criterion of 70 ft-lb for testing the compatibility of materials with liquid oxygen. Since the development of this tester and establishment of this criterion, considerable compatibility data has been generated using these testers. The ABMA type impact tester is shown in Fig. 20.

Concurrently, with the expanding ballistic missile and space programs, a large variety of materials of construction have seen service with liquid oxygen under a broad spectrum of operating conditions. The success in service during this period of those materials shown to be compatible by impact testing, as well as those having occasional failures and shown to be incompatible, has contributed to the justification of current impact requirements.

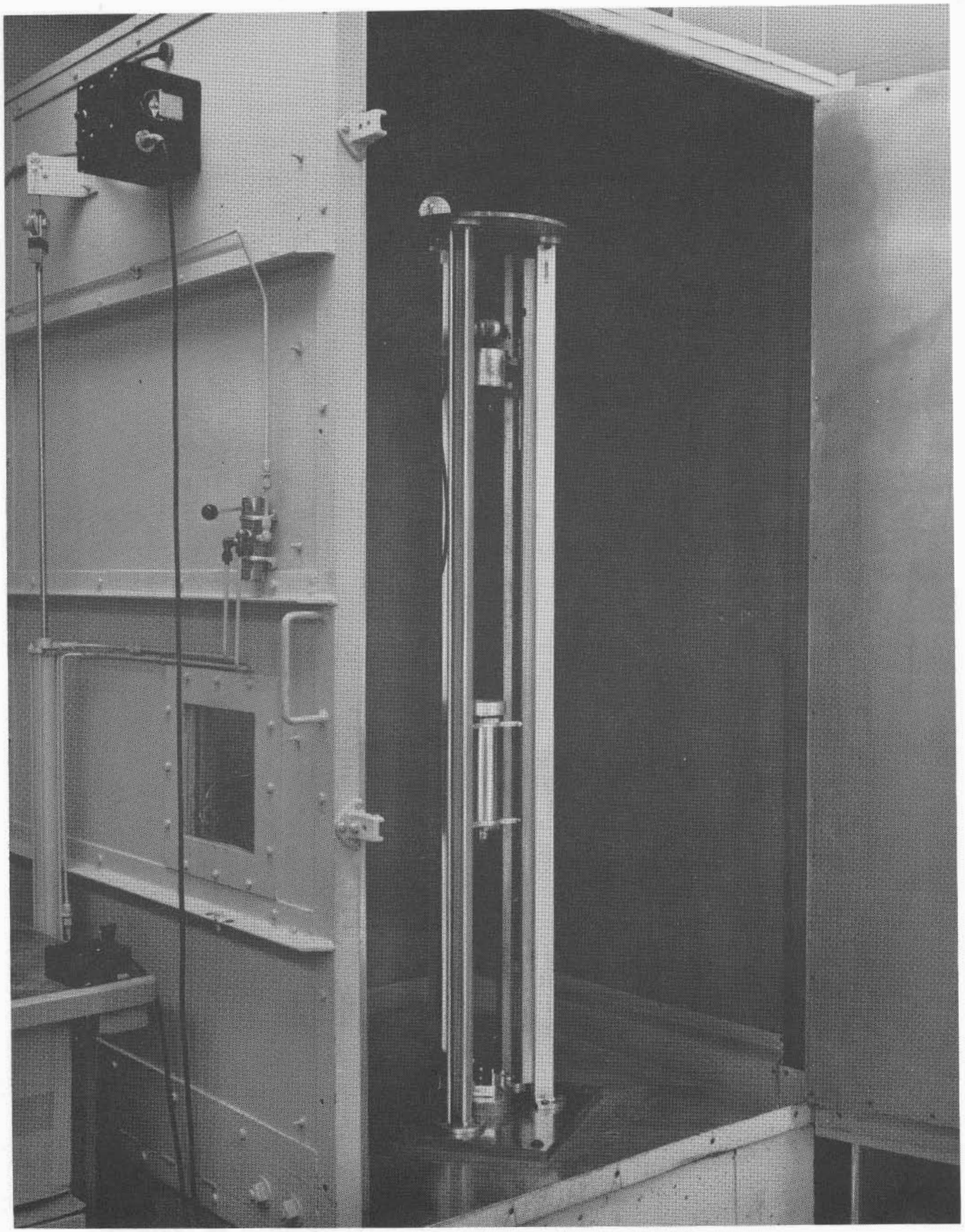

Figure 20. ABMA Impact Tester

Impact testing is frequently required with apparent disregard for the application for which a material is being considered other than exposure to an oxidizer. Impact testing induces a reaction with a material by creating at impact high local temperatures resulting from adiabatic compression and/or friction. If the temperature achieved exceeds the combustion or ignition temperature of the material impacted, a positive reaction is obtained. If this reaction is sufficiently exothermic to propagate, an explosion, flash, audible report, or visible burning or charring will result. Such an energy release would not normally be anticipated, for example, on the interior of a propellant tank. The literature (Ref. 6), however, shows that impact testing revealed incompatibility with LOX of a proposed tank material (titanium), although tests more representative of what a tank might see in service failed to indicate this incompatibility. The latter tests included exposure to vibration, pressure cycling, ultrasonic energy, sonic energy, and external impact. Actual failure of the titanium tanks in service with LOX would seem to validate the use of some type of impact or sensitivity testing to evaluate a proposed tank material.

A number of different approaches to impact testing have been used in the past. These include the drop hammer tester developed by North American Aviation, Inc. This device imparted energy to the specimen directly by dropping the striker together with the plummet onto the specimen. Reaction Motors Division of Thiokol Chemical Company developed a tester which increased the energy imparted by decreasing the area of impact. The ABMA-type tester, which now serves as the industry standard, indirectly imparts energy to the specimen by placing a striker pin of a half inch in diameter on the specimen and dropping a 20-pound plummet onto the opposite end of the pin. Industrial cooperative programs have shown poor correlation among these different testers. Test reproducibility of the ABMA-type tester is also not as good as desired as witnessed by the statements of precision recently proposed for inclusion in the tentative ASTM method for testing of the compatibility of materials in LOX. These statements of precision are shown in Table IV.

TABLE IV

STATEMENT OF PRECISION FOR TESTING
COMPATIBILITY OF MATERIALS IN LOX

Threshold Value Drop Height, inches	Repeatability, One Operator and Apparatus, inches	Reproducibility, Different Operator and Apparatus, inches
24	17.0	40.3
15	10.6	25.2
6	4.3	10.1

Nonmonotonisity of impact test data has also been reported (Ref. 7).

Use With Other Oxidizers

The foregoing discussion has dealt mainly with the impact testing of materials with LOX because the technology of impact testing has been developed largely through the use of this oxidizer. Although limited tests have been conducted with nitrogen tetroxide and fluorine, the data generated have not been extensive enough to evaluate impact testing as a tool for testing materials in these propellants. Because of the toxicity and reactivity of propellants, such as liquid fluorine and nitrogen tetroxide, current procedures for impact testing would have to be appreciably modified for use with these oxidizers, since current equipment requires open handling of the propellant. Modifications of the impact tester to provide for closed propellant space would very likely affect performance characteristics of the impact tester, making the resulting data of questionable value in relation to data gathered by using other propellants with standard testers.

Alternate Approaches

Two alternate approaches are available for obtaining sensitivity data commensurate with that produced by conventional impact testing. These are, puncture testing and, thermal ignition testing. Numerous puncture

tests have been conducted on LOX-titanium alloy systems, and the results were found to confirm the incompatibility of LOX and titanium (Ref. 6). Several studies pertinent to ignition characteristics of metals in oxygen have been conducted (Ref. 8 and 9). These studies indicate thermal ignition of titanium at 1050 F, which is over 1900 F below its melting point, a condition which is unique to metallic materials. Aluminum has been found to ignite at temperatures above its melting point, and the stainless-steel alloys ignite at temperatures approximating their melting points. Since it is apparent that impact and puncture tests are indirect methods of attaining high localized material temperatures leading to reaction, a direct study of the ignition characteristics of metallic materials in the propellant under consideration appears to be a more realistic test.

Thermal ignition tests of metallic materials can be controlled with respect to propellant pressure and heating rate, thus providing considerably more data, control, and precision, than provided by impact testing. Similar tests could be conducted with nonmetallic materials, except that the heating rate would probably be somewhat more difficult to determine.

The basic fault of impact test data is that it is difficult to relate the 72 ft-lb energy input to temperature and pressure parameters which will be encountered in a particular design usage of a material.

TESTING OF PRECRACKED AND NOTCHED METALLIC SPECIMENS

A mechanical property which is becoming increasingly important to designers of propellant tanks and pressure vessels is the fracture toughness of a metallic material (Ref. 10). This property can be defined as the load-carrying capacity of a material in the presence of a flaw. Flaws may originate as nicks or scratches produced during fabrication, or they may be cracks in or near a weld zone. Such flaws not only effect the load-carrying capacity of the material, but, with respect to stress-corrosion cracking, greatly hasten the time to failure for a susceptible material.

Application of Fracture Toughness

The development of the theory and the application of fracture toughness for the design of pressure vessels has radically changed design concepts. Prior to the application of fracture toughness theory, pressure vessels were designed to limits dictated by the ultimate and yield strength multiplied by a safety factor. The fact that flaws are likely to be present and that they alter the effective strength of the material is now accepted. The designers problem is to use the (1) estimate of flaw size (determined by nondestructive test methods), and (2) the effect of this flaw on material properties under service conditions. In particular, the stress level at which this flaw is likely to propagate rapidly and catastrophically has become a design criterion. For pressure vessels, a further design criterion is the stress level at which a surface crack becomes a through crack and thus causes a leak. This may occur before the growing crack has reached the limit required for rapid crack propagation. In the case of pressure vessels which contain corrosive propellants, the question of the effects of initial crack size is complicated by considerable uncertainty as to whether an initially determined or experimentally introduced crack is not propagated by factors other than that of the influence of the service stress. For instance, crack propagation may occur by stress-corrosion effects, corrosion fatigue, or by slow cracking caused by atomic hydrogen. Experimental determinations, therefore, must be made in propellant environments, with adequate control specimens to indicate the effects of these additional factors.

Rapid crack propagation in a structure from a pre-existent defect (size '2a') will occur if the fracture stress (σ_f) exceeds a certain limit determined by the geometry of the part, the modulus (E), and Poisson's ratio of (γ) of the material, and the critical strain energy release rate (G_c) of the material. If the opening mode of the crack is one of a flat tensile break with negligible plastic contraction parallel to the

leading edge of the crack, the following relationship between the variables is valid:

$$\sigma_f = \left(\frac{G_{1c} \, E}{(1 - \gamma^2) \, a \, \pi} \right)^{1/2} \tag{7}$$

and, by introducing a stress intensity factor K, it follows for the case of plane strain:

$$K_{1c} = \sigma_f \sqrt{\pi \, a} \tag{8}$$

$$K_{1c} = \left(\frac{G_{1c} \, E}{(1 - \gamma^2) \, \pi} \right)^{1/2} \tag{9}$$

the fracture stress becomes

$$\sigma_f = \frac{K_{1c}}{\sqrt{a}} \tag{10}$$

Experimental studies, therefore, are reduced to the problem of finding the stress field intensity factor K_{1c} for various pressure vessel materials under service conditions. The above treatment is somewhat simplified; in particular, no corrections are made for the plastic deformation occurring around the crack tip. However, a number of studies have been concluded, resulting in the development of methods able to account for this necessary correction factor.

Equations are available relating the K_{1c} factor, crack length, or depth to various shapes and geometric configurations. The fracture stress under those conditions then becomes the design stress to which any desired safety factor can be applied. The stress field intensity factor should be measured at the anticipated operating temperature and if the strain rate is high, this should also be taken into consideration.

The problem of the surface crack that has penetrated through the pressure vessel before reaching a critical crack size has been treated by Irwin (Ref. 11). Again, results can be obtained in terms of the geometry and the stress field intensity factor.

Experimental investigations for the determination of K_{1c} have been developed by the ASTM subcommittees and other investigators, and standardized tests recently have been developed (Ref. 12). One specimen is the notched bend test specimen, the other the single-edge-notch Kahn-type test specimen. Both are shown in Fig. 21.

Starter cracks are usually initiated in the specimens by flexure fatigue or tensile loading at stresses not exceeding 40 percent of the yield strength. Crack length measurements can be made by compliance curves obtained from calibration runs. These curves can be obtained from extensometers or deflection gages mounted outside of the actual test chambers.

K_{1c} values can be calculated from either of the test specimens by means of the following equations.

Notch bend specimens:

$$K_{1c}^{\ 2} = \left(\frac{1}{1 - \gamma^2} \frac{P^2}{B^2} \frac{L^2}{W^3}\right)\left[34.7 \frac{a}{W} - 55.2 \frac{a^2}{W^2} + 196 \frac{a^3}{W^3}\right] \quad (11)$$

Single-edge notch specimens:

$$K_{1c}^{\ 2} \left(\frac{1}{1 - \gamma^2} \frac{P^2}{B^2 W}\right)\left[7.59 \frac{a}{W} - 32 \frac{a^2}{W^2} + 117 \frac{a^3}{W^3}\right] \quad (12)$$

where

L = length

P = test load

B = specimen breadth

W = specimen width

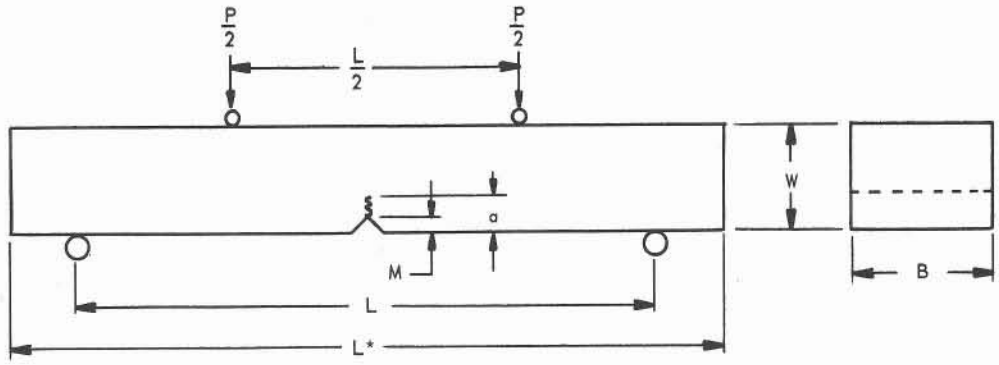

(a) Notched Bend

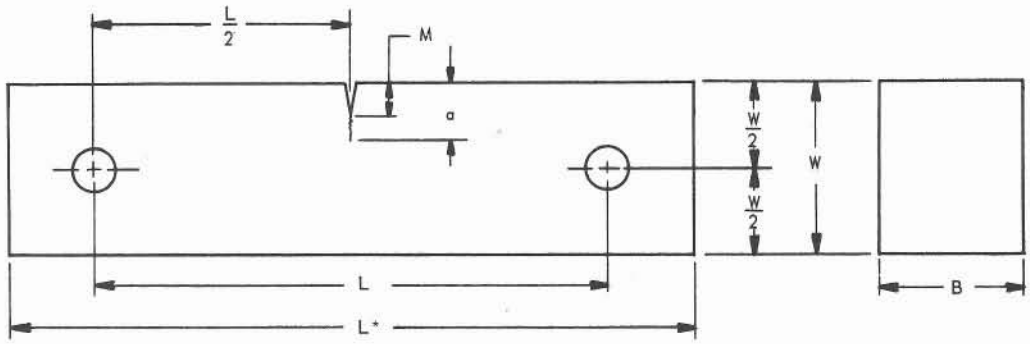

(b) Single-Edge Notch

Figure 21. Precracked Test Specimens

Both types of test specimens are suitable for the determination of K_{1c} values in welds. For this case, specimens are usually fabricated so that the notch is either in the weld zone or the heat-affected zone. Both types of test specimens are also suitable for the determination of the effects of environmental factors on the stability of a pre-existent crack. Specimens can be inserted in the environment under loads that are lower than those required for fracture and examined after exposures for various time intervals.

Test Procedures to Evaluate Fracture Toughness in a Propellant Environment

To obtain applicable design data, mechanical tests should be performed under simulated propellant storage vessel conditions. This requires immersion of the test specimens in the propellant and actual testing (load to fracture) in the propellant. Bend-type tests are recommended in preference to tensile tests because of the lower load requirements and, therefore, decreased hardware requirements for performing the tests. Bend tests result in more scatter of the data; however, the use of four-point loading (Fig. 21) minimizes scatter so that satisfactory data may be obtained.

Initially, calibration tests are conducted in air to measure the crack extension vs deflection length of the specimen, and the data thus obtained are used to solve the Irwin equation for fracture toughness. Testing in the propellant may be conducted in two ways: initially, specimens are exposed to the propellant and immediately loaded to failure; subsequent testing is conducted as a function of time, with the specimen loaded to some predetermined level. The latter tests allow for evaluation of crack propagation or growth, possible stress-corrosion cracking as a function of load and time, and effects of these on the fracture toughness. For stress-corrosion cracking, $K_{1scc} \sim \frac{1}{5} K_{1c}$.

After a certain exposure period, the specimen is loaded (by increasing the load) to failure without removing it from the environment and without unloading the specimen prior to loading to fracture. The data generated can then be used to determine K_{1c} as a function of time and preload. It should be noted that the K_{1c} discussed here is only a measurement of the plane strain fracture toughness and is only representative of plane strain conditions which exist in spherical pressure vessels. It has been shown that K_{1c} data are not quantitatively applicable for predicting crack instability and failure in nonplane strain conditions. Under nonplane strain loading, the fracture toughness K_c is generally higher than K_{1c}, so that K_{1c} determination results in a low fracture toughness values for design application.

Notched Tensile Specimens

Notched tensile specimens have found increased popularity in evaluating the susceptibility of a material to stress-corrosion cracking and hydrogen embrittlement. A typical notched-round tensile specimen is shown in Fig. 22. The notch depth, notch radius, and specimen diameter may be correlated to yield a particular stress concentration factor K_t. Stress concentration factors for a number of specimen geometries are detailed in Ref. 13, and a plot of stress concentration factors for notched round tensile bars is reproduced in Fig. 23. For a notched round tensile specimen as $r/D \rightarrow 0$, the stress-concentration factor $\rightarrow \infty$; and, thus, at an extremely small notch radii, the specimen simulates a precracked specimen. In reality, however, the stress-concentration factor for a tensile specimen is limited by the size of the notch radius which can be machined and measured; and, normally, K_t values do not exceed 15-16.

As previously mentioned, specimens of this type find use in determining the stress-corrosion susceptibility of a material. Both stress corrosion and hydrogen embrittlement require an induction period at a particular stress level (assuming a threshold value has been reached) before actual

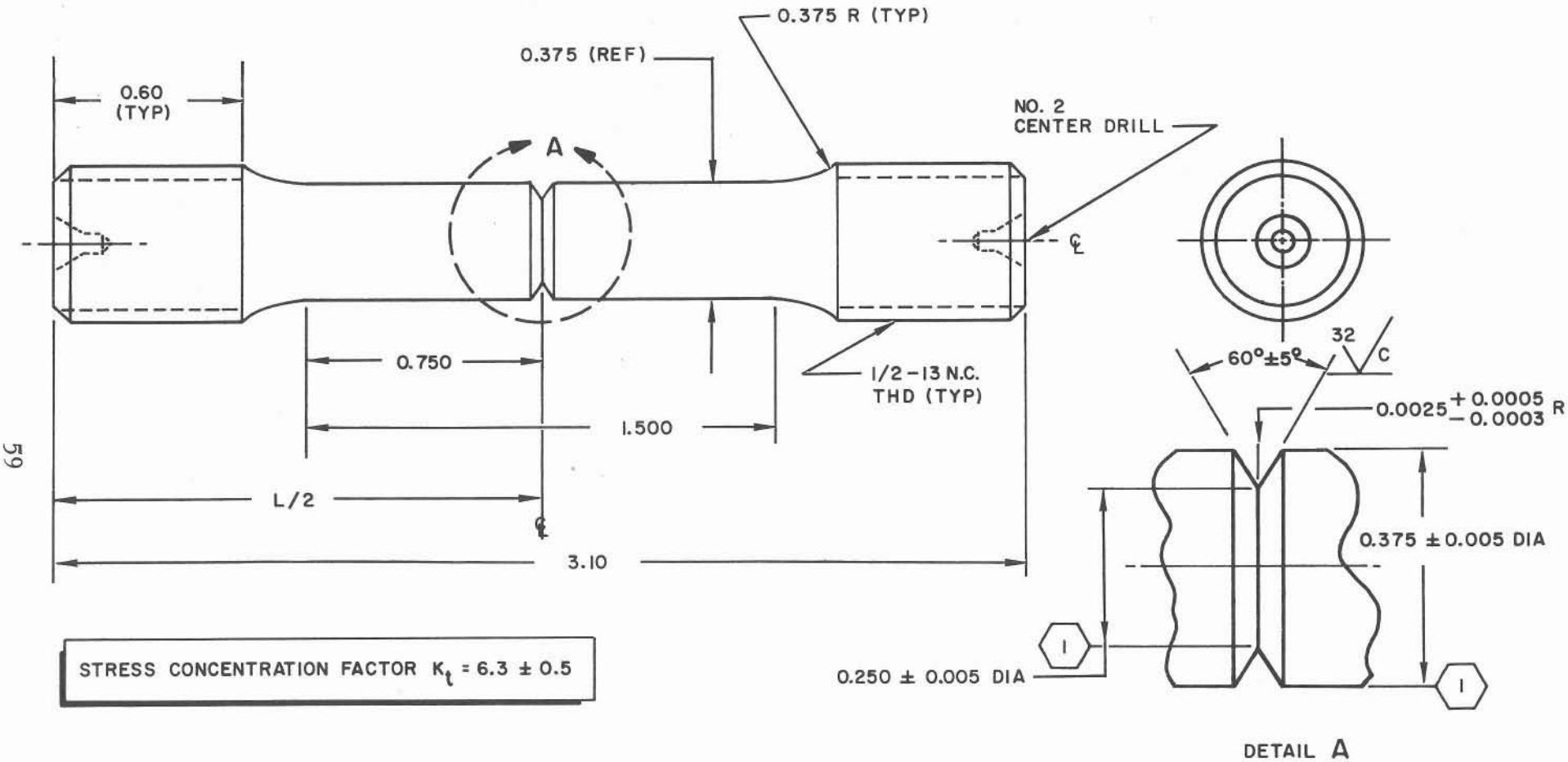

Figure 22. Round Tensile Bar Notched to Yield a Stress Concentration Factor K_t of Approximately 6.3

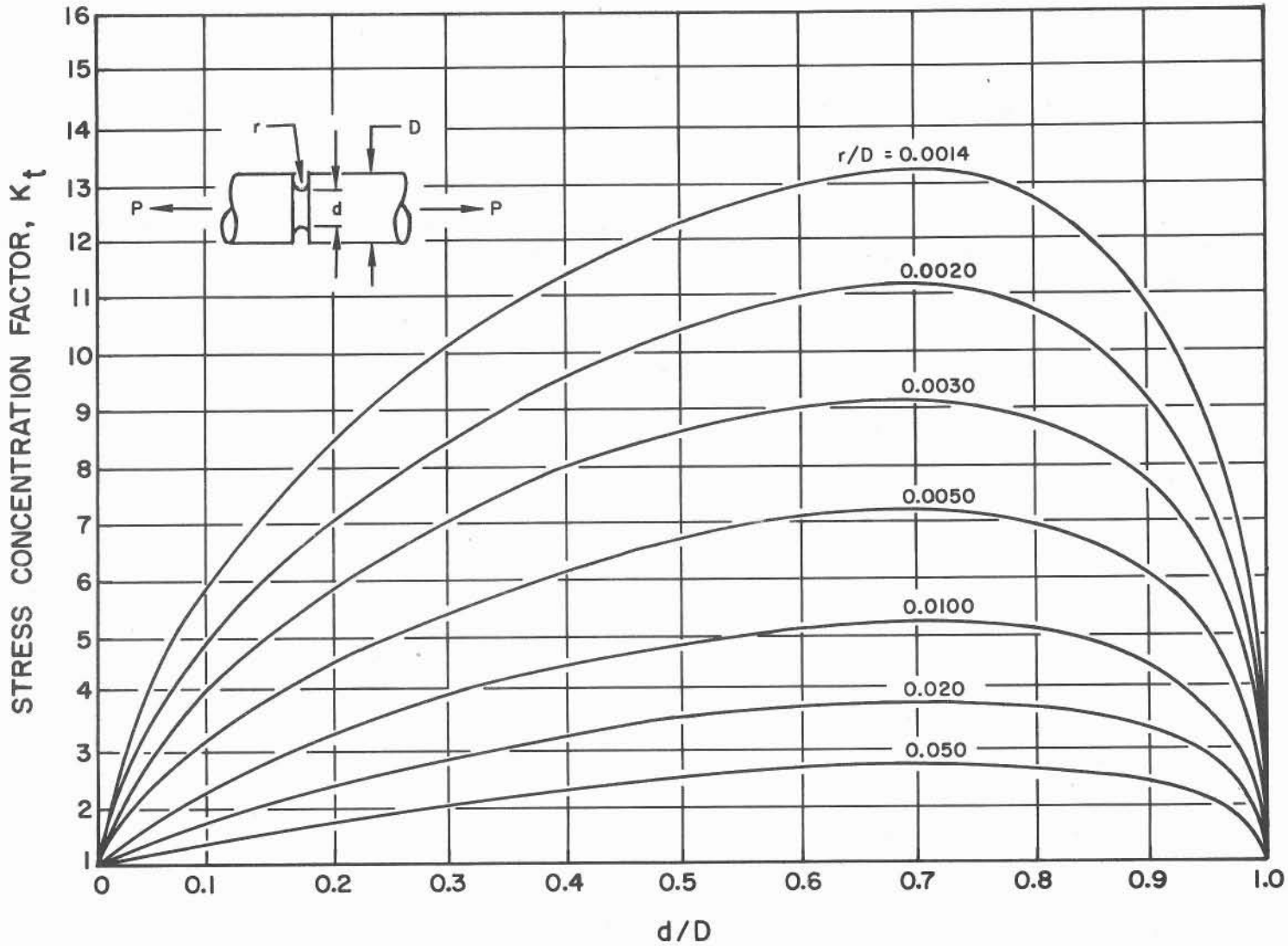

Figure 23. Stress Concentration Factor, K_t for a Grooved Round Bar in Tension (Ref. 13)

cracking initiates. This induction period is drastically reduced when notched tensile specimens are used, the induction period decreasing as K_t and the tensile stress increase.

In a recent study of the stress corrosion cracking of Ti-6Al-4V (annealed) in anhydrous methyl alcohol (Ref. 14), it was found that, for a smooth round tensile bar loaded to 80 percent of yield, that cracking initiated in approximately 200 hours. Substitution of a notched tensile specimen having a K_t of 6.3, and loaded to the same stress level resulted in cracking within 48 hours.

The use of notched round tensile specimens (loaded in a fashion identical to that shown in Fig. 13) is recommended as a complement to other stress-corrosion specimens. Because stressed notched tensile specimens result in biaxial stresses at the notch, and the effects of biaxial stresses with respect to stress-corrosion cracking are not known precisely, other axially loaded tensile specimens should be utilized for testing. The use of notched specimens has merit particularly in short-term programs where the induction period for a smooth round tensile specimen may be of a longer duration than that of the test program.

TYPICAL LIQUID PROPELLANT COMPATIBILITY TEST SCHEMES

Propellant compatibility testing should follow a logical test plan which leads to final material selection for a particular design. Typical evaluation schemes for determining metallic and nonmetallic material propellant compatibility are shown in Fig. 24 and 25. These flowcharts are not complete since the design usage of the material will dictate the particular tests used. These charts are presented, however, to show the logic involved in determining the propellant compatibility of a material, starting with initial screening tests and concluding with actual hardware testing.

TYPICAL LIQUID PROPELLANT COMPATIBILITY TEST SCHEMES

Propellant compatibility testing should follow a logical test plan which leads to final material selection for a particular design. Typical evaluation schemes for determining metallic and nonmetallic material propellant compatibility are shown in Fig. 24 and 25. These flowcharts are not complete since the design usage of the material will dictate the particular tests used. These charts are presented, however, to show the logic involved in determining the propellant compatibility of a material, starting with initial screening tests and concluding with actual hardware testing.

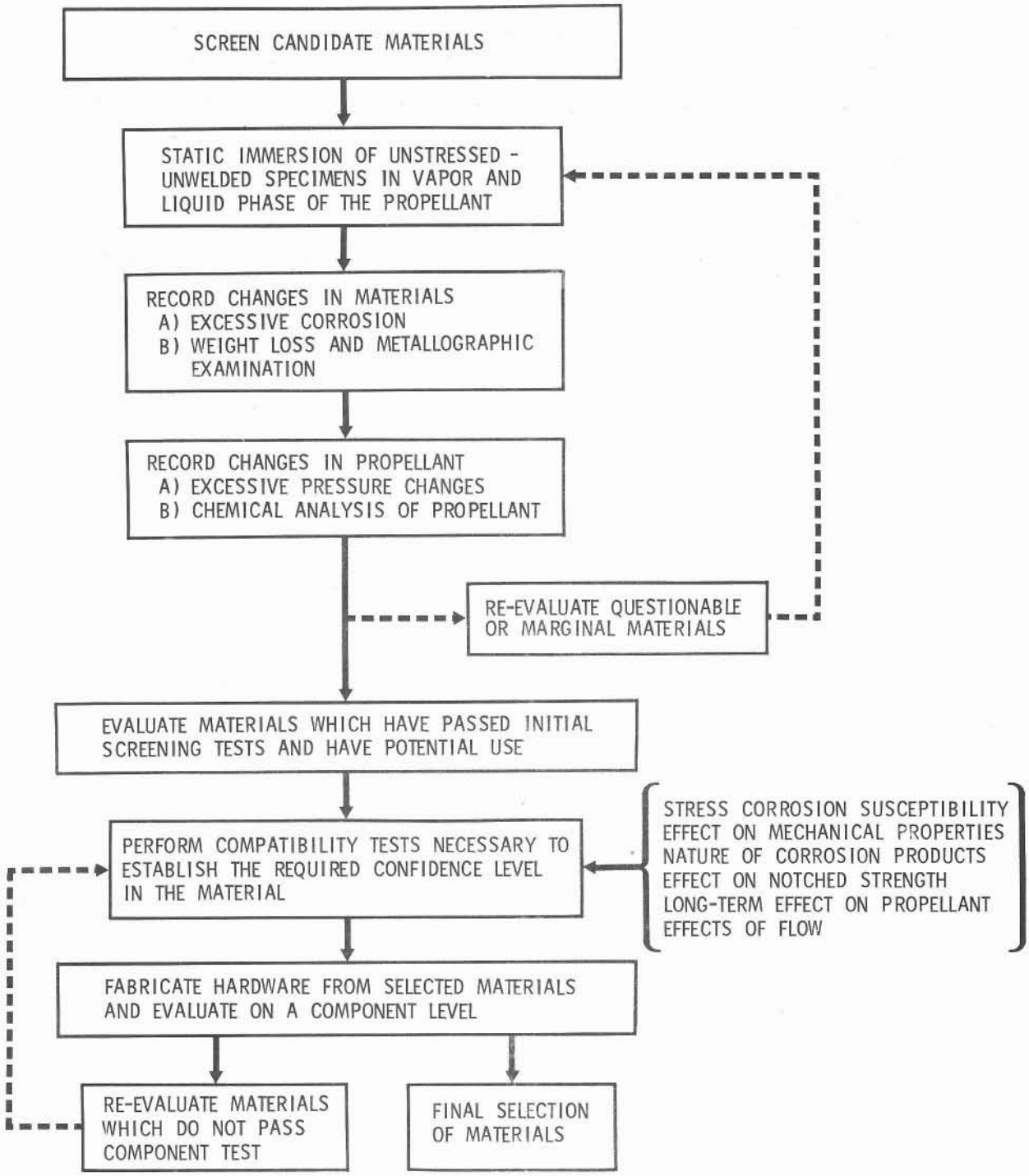

Figure 24. Evaluation of Metallic Materials

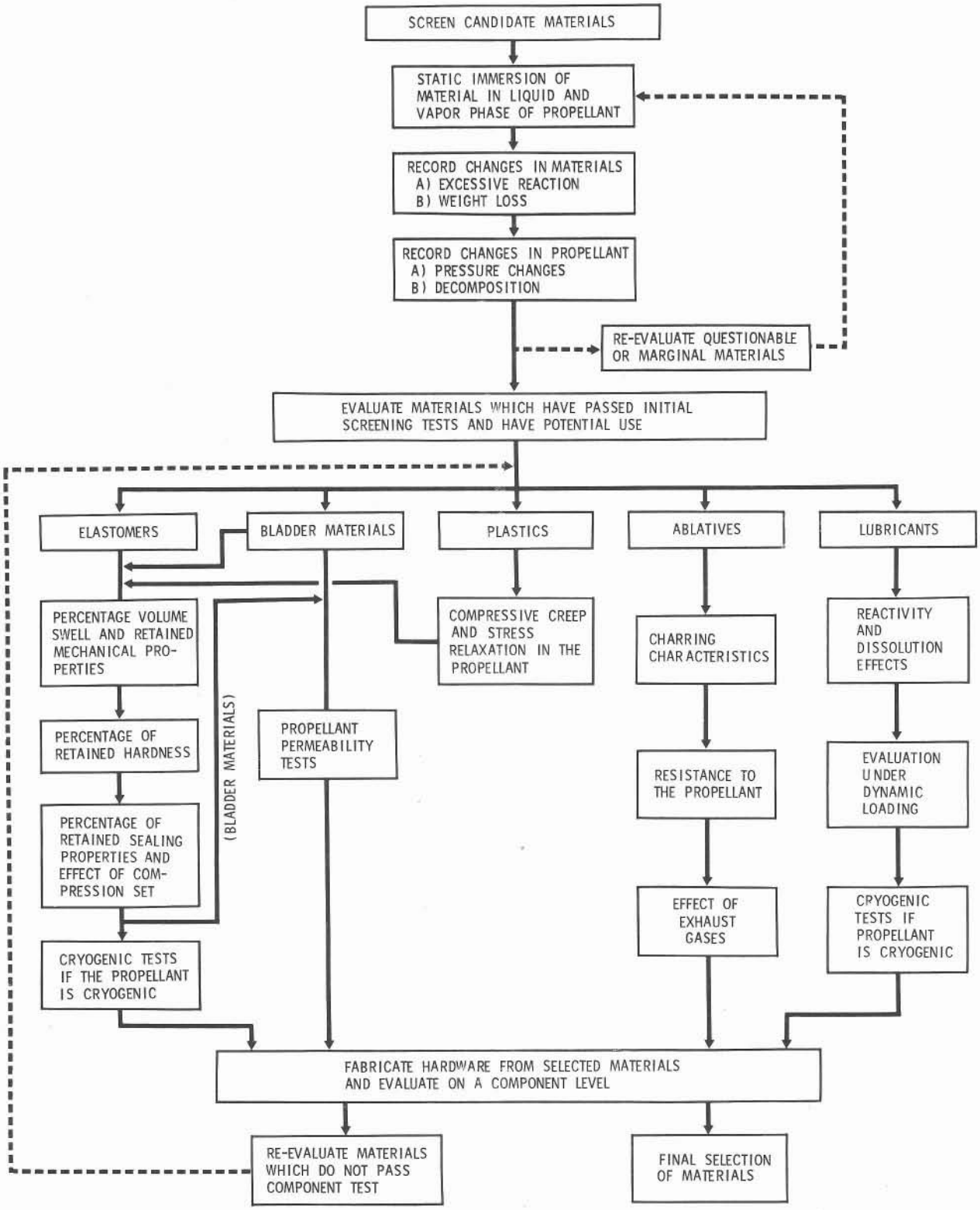

Figure 25. Evaluation of Nonmetallic Materials

SUMMARY

To discuss all of the test methods (good and bad) utilized in propellant compatibility testing of materials would be beyond the scope of this paper. It is hoped, however, that by pointing out a number of shortcomings of currently accepted procedures and by describing tests which yield applicable design data, this paper will serve to provide stimulus for the consideration and application of test methods which yield usable design data.

It is the author's opinion that a major shortcoming in propellant compatibility testing is that this area often is included under propellant characterization studies. Hence, compatibility instead of being studied and analyzed separately, becomes merely one of a number of other physical and chemical properties being studied and looses its significance. Secondly, a number of propellant compatibility studies are research-oriented, and, while they yield voluminous academic data regarding reaction rates, studies of film formation, etc., they fail to yield data which can be used in selecting materials for hardware fabrication. Often, the materials selected for testing would not be applicable irrespective of compatibility. Closer liaison is needed between research and engineering in this area. Integration of personnel from both areas would result in programs which yield data of both theoretical and engineering importance and would reduce the number of overlapping tests which are often conducted to yield design data.

Contracting agencies have a responsibility in defining the type of data required and relating these data to hardware which may be fabricated from the materials tested. As pointed out in the Introduction, propulsion system design criteria and testing techniques must be related to yield useful and applicable data.

It is obvious that system design criteria are difficult to standardize because of the wide and varying requirements of liquid rocket propulsion systems. However, standard test methods should be available to yield data applicable for a particular criteria. Standardized test methods would eliminate one of the largest variables present in propellant compatibility studies: the test method. Redundancy and repetition in studies would be reduced or eliminated and new data required would represent only an extension of data already acquired.

NOMENCLATURE

$\mathring{A}$	=	angstroms
a	=	defect size (crack length)
B	=	specimen breadth
cm	=	centimeters
D	=	diameter
D′	=	reaction product density, gm/cm^3
d	=	metal density, gm/cm^3
E	=	modulus of elasticity
emf	=	electromotive force, volts
G_c	=	critical strain energy release
H	=	distance between specimen holder supports
ipy	=	inches per year
K_c	=	fracture toughness
K_{1c}	=	plane strain fracture toughness
K_{1scc}	=	plane strain fracture toughness for stress-corrosion cracking
K_t	=	stress concentration factor
L	=	specimen length
M	=	notch depth
M′	=	reaction product molecular weight, gm/mole
m	=	metal atomic weight, gm/mole
mpy	=	mils per year
n	=	number of metal atoms in the reaction product
P	=	load
r	=	radius
t	=	specimen thickness

u	=	dummy variable
W	=	specimen width
Ym	=	maximum specimen deflection

GREEK LETTERS

ϵ	=	strain
π	=	3.1416
σ	=	stress
μ	=	microns
θ_o	=	maximum slope of specimen at X = 0
γ	=	Poisson's ratio
σ_f	=	fracture stress

ACKNOWLEDGMENT

The author would like to express his thanks to Miss Kathy Youel and Messrs. D. E. Goggin, E. L. Hawkinson, R. P. Jewett, J. H. Lieb, F. T. Schuler, and W. A. Taggart of Rocketdyne for their technical advice and comments on this paper.

REFERENCES

1. Hoffman, S. K.: "Propulsion For Space Flight," Paper presented before the Royal Aeronautical Society, London, England, 14 April 1966.

2. Dipprey, D. F.: "Earth-Storable Propellants for Spacecraft," Astronautics and Aeronautics, pp 64-67, June 1965.

3. Grelecki, C. J. and S. Tannenbaum: "Survey of Current Storable Propellants," American Rocket Society Journal, pp 1189-1195, August 1962.

4. Haaijer, G. and A. W. Logerow: "Stress Analysis of Bent-Beam Stress Corrosion Specimens," Corrosion, 21, No. 4, pp 105-112, April 1965.

5. R-5136-4P, Final Technical Report for Product Engineering, Vol 4, Rocketdyne, a Division of North American Aviation, Inc., Canoga Park, California, 31 May 1964.

6. Riehl, W. A., C. F. Key, and J. B. Gayle: "Reactivity of Titanium With Oxygen," Paper presented at the Society of Materials and Processes Engineers Conference, Los Angeles, California, 15 November 1962.

7. Gayle, J. B.: NASA Technical Memo, NASA TMX-53195, George C. Marshall Space Flight Center, Huntsville, Alabama, 22 January 1965.

8. Grosse, A. V. and J. B. Conroy: "Combustion of Metals in Oxygen," Industrial and Engineering Chemistry, 50, No. 4, pp 663-372, April 1958.

9. Dean, L. E. and W. R. Thompson: "Ignition Characteristics of Metals and Alloys," American Rocket Society Journal, pp 917-923, July 1961.

10. Abraham, L. H.: Space Technology; Spacecraft Systems, NASA SP-65, National Aeronautics and Space Administration, Washington, D.C., pp 29-31, 1965.

11. Boyle, R. W., A. M. Sullivan, and J. M. Kraft: "Determination of Plane Strain Fracture Toughness With Sharply Notched Sheets," Welding Journal, 41, No. 9, pp 428s-432s, 1962.

12. Hanna, G. L. and E. A. Steigerwald: AFML-TR-65-213, Wright Patterson Air Force Base, Ohio, September 1965.

13. Peterson, R. E.: Stress Concentration Design Factors, John Wiley and Sons, New York, New York, 1953.

14. Halchak, J. and W. T. McFarlen, unpublished data, Rocketdyne, a Division of North American Aviation, Inc., Canoga Park, California, 1967.

plastics will be evaluated for change in the compressive creep and stress relaxation in the propellant. It should be emphasized that the previously mentioned properties may be time dependent with respect to removal of the material from the propellant. To establish the existence of time dependency, properties should be measured immediately following removal from the propellant and then measured again at a later date. Comparison of the data will indicate whether the properties are time dependent with respect to removal from the propellant. Normally, time dependency of elastomers and plastics is related to solvency effects of the propellant. Changes due to solvency effects are usually recoverable. Effects independent of time are usually caused by chemical changes due to exposure to the propellant such as depolymerization and are normally nonrecoverable.

Changes in the mechanical properties of elastomers and plastics can be quantatively determined by use of tensile specimens fabricated from the material to be tested. Typical nonmetallic tensile specimens are shown in Fig. 10. These same specimens can be stressed to determine if the material (plastic) is susceptible to stress-crazing; a cracking phenomena which appears similar to the stress-corrosion cracking of metals.

Effects of the Materials Upon the Propellant

During immersion testing of candidate materials in the propellant, consideration should be given to possible effects the materials may have on the propellant. Such changes are usually caused by decomposition of the propellant or composition changes due to reaction with the materials under test. Decomposition can be monitored by measuring pressure changes as a function of exposure time. Figure 11 shows a typical tank with a pressure gage used to contain specimens for static immersion test. Compositional changes are assessed by chemical analysis of the propellant before and after the test. Compositional changes will sometimes be detected by changes during test, but, if the gaseous products are significantly soluble, such changes may not be detected.