SATURN INSTRUMENTATION SYSTEMS

By

James T. Powell
Marshall Space Flight Center
Huntsville, Alabama, U.S.A.

To Be Presented at the Third International Flight Test Instrumentation Symposium, College of Aeronautics, Cranfield, Buckinghamshire, England, April 13 - 16, 1964

SATURN INSTRUMENTATION SYSTEMS

By James T. Powell

ABSTRACT

A brief description of the Saturn vehicles is given, delineating the makeup of and differences between the Saturn I, Saturn IB, and Saturn V. Certain ground rules and constraints for instrumentation system design are discussed. The measuring system (transducers and signal conditioning) is outlined, showing the signal paths into the telemetry systems. Various telemetry modulation and multiplexing methods are defined, and the combining of these techniques into a typical Saturn telemetry system is illustrated. Special emphasis is given to digital techniques, and their inter-relationship to vehicle checkout procedures. Radio frequency tracking systems used are briefly discussed, giving the characteristics of each and the coverage obtained. Command systems for range safety and guidance are explained in some detail. The use of optical instrumentation, television and film cameras is covered, showing the arrangement planned for Saturn V. The "operational" Saturn V vehicles to be used for moon launches have somewhat reduced instrumentation, and this is briefly listed. A suggestion is made for use on supersonic transport aircraft of techniques employed on the Saturn.

SATURN INSTRUMENTATION SYSTEMS

By James T. Powell

The United States has established as a national goal in this decade the landing of men on the moon and their return to earth. The Lunar Orbit Rendezvous mode has been selected as the method most likely to succeed in this time period. The rocket launch vehicle that will place the Apollo spacecraft into a lunar trajectory is the Saturn. This paper will describe the instrumentation systems utilized in the various Saturn stages.

While a great deal of information relative to the Saturn has been published, it is felt that a preliminary description will be helpful. The Saturn program involves three vehicles with different missions. They are Saturn I, Saturn IB, and Saturn V.

Saturn I. Saturn I is a two-stage vehicle as shown in Figure 1. It is capable of placing about 9,000 kilograms (10 tons) in low earth orbit. The S-I, or first, stage is manufactured by Chrysler Corporation and utilizes 8 Rocketdyne H-1 kerosene and oxygen engines with 834 kilonewtons (188,000 pounds) thrust, similar to those used in the Jupiter and Thor weapons. The propellant tanks are clustered and are designed to utilize tooling previously used for fabrication of Jupiter and Redstone tanks.

The S-IV, or second, stage is built by Douglas Aircraft Corporation and utilizes 6 Pratt and Whitney RL-10 hydrogen and oxygen engines with 65.8 kilonewtons (15,000 pounds) thrust each, similar to those used in the Centaur. The propellant tanks are of monocoque construction, insulated, and have a common bulkhead.

The Instrument Unit (IU) is on top of the S-IV stage, immediately beneath the Apollo spacecraft, and contains all guidance, control, and sequencing equipment for the entire vehicle. It is treated as a separate stage, although it contains no propulsion.

The missions of the Saturn I vehicle are as follows:

1. To develop and demonstrate rocket engine clustering techniques.

2. To further advance liquid hydrogen engine technology, particularly the clustering of such engines.

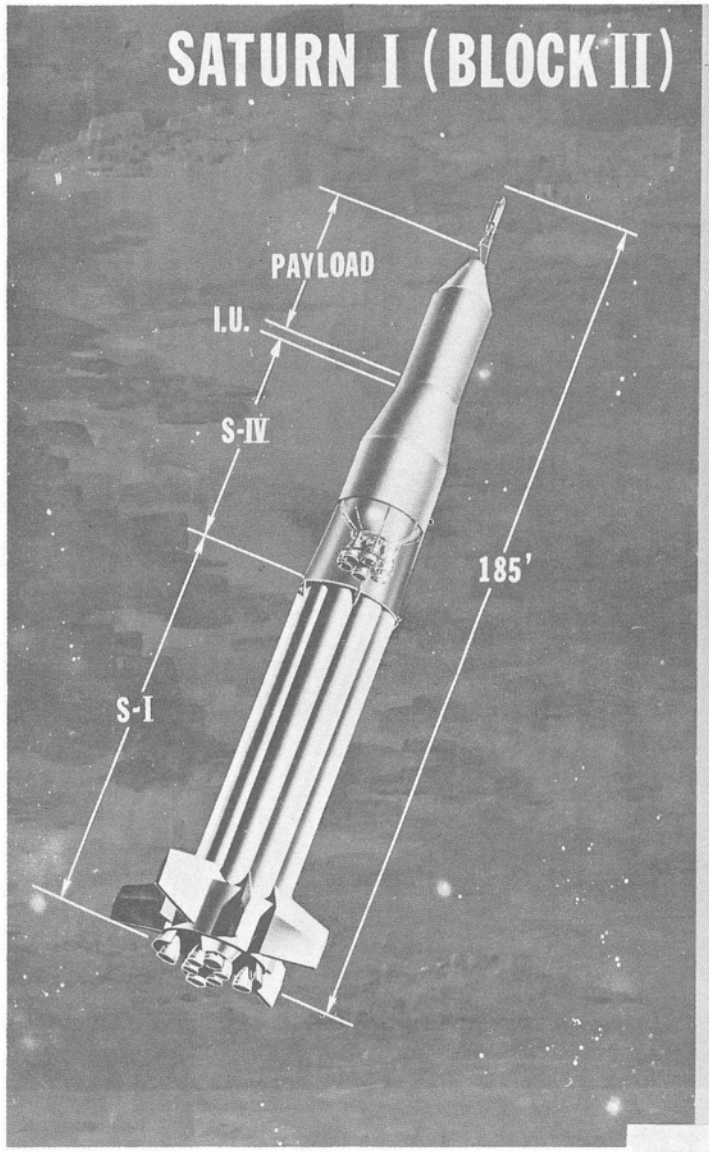

CHARACTERISTICS

GUIDANCE: INERTIAL

CONTROL: GIMBALLED ENGINES

PAYLOAD:

11 TONS PER 100 N MILES

VEHICLE: LENGTH _____ 185 FT

WEIGHT FUELED 550 TONS

WEIGHT EMPTY 65 TONS

INSTRUMENT UNIT:

HEIGHT _____ 34"

DIAM. _____ 154"

STAGE SIZES:

S-I _____ 257" x 80'

S-IV _____ 220" x 41'

STAGE THRUST:

S-I _____ 1,500,000 LB

8 H-1 LOX/RP-1 ENGINES

S-IV _____ 90,000 LB

6 RL 10 LOX/LH_2 ENGINES

MS-G 14-1-63 REV E
MONTHLY JAN 20 1964 EX-D 1002 E

FIGURE 1

3. To test subsystems and concepts that will be used on lunar launch vehicles; i.e. guidance, automatic checkout, etc.

4. To conduct certain tests of the Apollo spacecraft in low earth orbit.

The Saturn I vehicles are those currently being launched at the Kennedy Space Center in Florida. Five have been launched, and five more are scheduled during 1964 and 1965.

Saturn IB. The Saturn IB shown in Figure 2 is a two-stage vehicle capable of placing about 145,000 kilograms (17 tons) in low earth orbit. The S-IB, or first, stage is similar to the S-I except that the engines have improved performance - 890 kilonewtons (200,000 pounds) thrust each. The fins have been reduced in size and other structural changes have been made to reduce weight.

The S-IVB stage, manufactured by Douglas Aircraft Corporation, uses a single Rocketdyne J-2 liquid hydrogen/liquid oxygen engine with 890 kilonewtons (200,000 pounds) thrust. The propellant tanks are of monocoque construction using milled skins, are insulated, and have a common bulkhead.

The Instrument Unit, as in the Saturn I, contains all guidance, control, and sequencing equipment for the complete vehicle.

The missions of the Saturn IB are as follows:

1. Further advancement of liquid hydrogen technology.

2. Further refinement of subsystems and techniques that will be used in lunar launch vehicles.

3. Placing the complete Apollo spacecraft in low earth orbit, for testing of the spacecraft systems. This will include practicing the turn-around maneuver of the Apollo Command Module and the Lunar Excursion Module and re-entry and recovery tests. Saturn IB launches are scheduled to begin in 1966.

Saturn V. The Saturn V vehicle shown in Figure 3 is a three-stage vehicle capable of placing 109,000 kilograms (120 tons) in a 550 kilometer (300 mile) orbit.

The S-IC, or first, stage is manufactured by the Boeing Company and utilizes 5 Rocketdyne F-1 engines, each with a thrust of 6.6 meganewtons

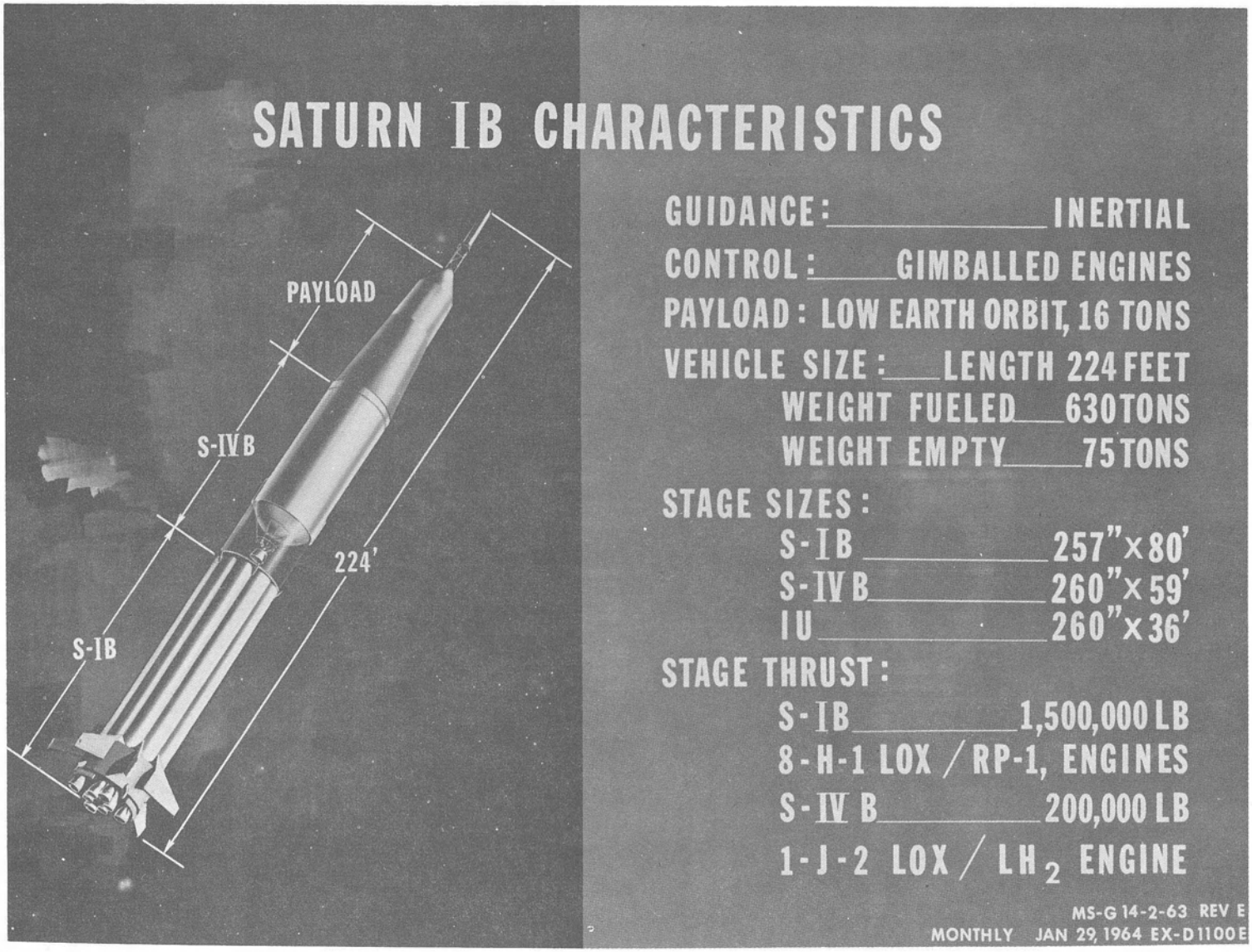
SATURN IB CHARACTERISTICS
PAYLOAD
S-IVB
S-IB
224'
GUIDANCE: INERTIAL
CONTROL: GIMBALLED ENGINES
PAYLOAD: LOW EARTH ORBIT, 16 TONS
VEHICLE SIZE: LENGTH 224 FEET
WEIGHT FUELED 630 TONS
WEIGHT EMPTY 75 TONS
STAGE SIZES:
S-IB 257" x 80'
S-IVB 260" x 59'
IU 260" x 36'
STAGE THRUST:
S-IB 1,500,000 LB
8-H-1 LOX / RP-1, ENGINES
S-IVB 200,000 LB
1-J-2 LOX / LH2 ENGINE
MS-G 14-2-63 REV E
MONTHLY JAN 29, 1964 EX-D1100E

FIGURE 2

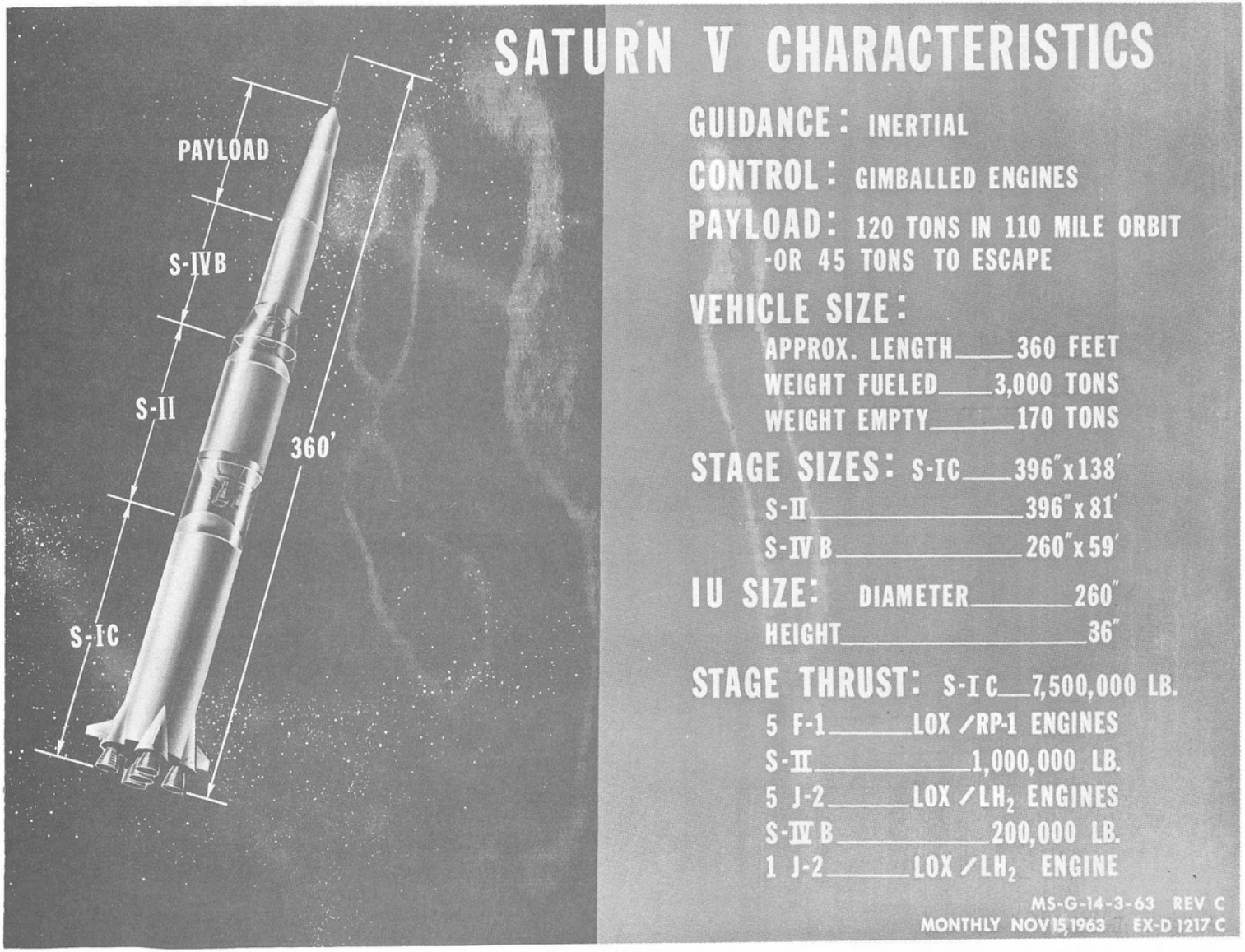
SATURN V CHARACTERISTICS
PAYLOAD
S-IVB
S-II
360'
S-IC
GUIDANCE: INERTIAL
CONTROL: GIMBALLED ENGINES
PAYLOAD: 120 TONS IN 110 MILE ORBIT
-OR 45 TONS TO ESCAPE
VEHICLE SIZE:
APPROX. LENGTH 360 FEET
WEIGHT FUELED 3,000 TONS
WEIGHT EMPTY 170 TONS
STAGE SIZES: S-IC 396"x138'
S-II 396"x81'
S-IV B 260"x59'
IU SIZE: DIAMETER 260"
HEIGHT 36"
STAGE THRUST: S-IC 7,500,000 LB.
5 F-1 LOX/RP-1 ENGINES
S-II 1,000,000 LB.
5 J-2 LOX/LH2 ENGINES
S-IV B 200,000 LB.
1 J-2 LOX/LH2 ENGINE
MS-G-14-3-63 REV C
MONTHLY NOV 15, 1963 EX-D 1217 C

FIGURE 3

(1.5 million pounds). The propellants are kerosene and liquid oxygen. Except for size, the F-1 engine is of conventional design. The propellant tanks are of monocoque construction using milled skins and are not insulated. The tanks are fabricated separately and then joined, leaving a space between.

The S-II, or second, stage is manufactured by North American Aviation and uses 5 Rocketdyne J-2 engines for a total thrust of 4.45 meganewtons (1 million pounds). The tank structure is of aluminum with milled skin, and is insulated. A common bulkhead separates the liquid hydrogen from the liquid oxygen.

The S-IVB, or third, stage is identical to that described for the Saturn IB vehicle except for the addition of an auxiliary propulsion system for attitude control during orbital coasting. The auxiliary propulsion system uses hypergolic storable propellants; nitrogen tetroxide and monomethyl hydrazine.

These three stages are topped by the Instrument Unit containing all guidance, control, and sequencing equipment for the complete vehicle.

The Saturn V vehicle, with the complete Apollo spacecraft assembled, stands 110 meters tall and is 10 meters in diameter at the S-IC stage. Lift-off weight will be about 27 meganewtons (6 million pounds). After second stage burnout and separation, the S-IVB stage and Apollo spacecraft proceed to a low altitude earth orbit. After a few orbits to allow proper calculations to be made, the S-IVB will propel the spacecraft out of earth orbit and into a lunar trajectory.

The Saturn V vehicle has at present only one mission -- to launch three men to the moon. A minimum number of test flights are scheduled for qualification of the vehicle prior to an actual lunar launch. These test flights will begin in 1967.

It can be seen that the Saturn program is based on a step-by-step approach, leading to the eventual lunar launch vehicle. A continuity of technology, hardware, and system design philosophy naturally follows. This is true of the electrical and electronics systems (which we combine under the term "Astrionics"), and particularly true in regard to instrumentation. While each stage contractor is responsible for the instrumentation system design of his particular stage, the broad system design philosophies, and in some cases even the "black boxes," are identical. The activities of the various stage contractors in the flight instrumentation area are under the technical supervision of the Instrumentation and Communication Division of Astrionics Laboratory at Marshall Space Flight

Center. The similarity of approach is enforced by us, not out of a "papa knows best" philosophy, but out of what we regard as necessity. There are several reasons, among which is the avoidance of unnecessary duplication of effort, and hence cost. However, the most important is that we regard the Saturn as a single integrated launch vehicle system, even though it is composed of several separate stages, which must be checked out and launched from a single ground complex with common support equipment.

Because of the similarity of the instrumentation systems of the various stages, this paper will discuss them in general terms and then examine the particulars of each stage.

Design Constraints and "Ground Rules." In any system design problem, there are certain restraints or ground rules within which one may operate. Some arise from preconceived notions of those involved in the problem and from formally established "company policy" or philosophy, but most are imposed by the realities of economics and the technical requirements. Even so, there is seldom only one "optimum" solution possible; therefore, choices must be made which involve trade-offs that are a matter of judgement. The Saturn instrumentation systems are not exceptions to this general statement. Some of the factors influencing system design will be discussed here.

1. Size. The sheer physical size of the Saturn is unprecedented. Its size is reflected in cost, volume of data required, and system complexity. There are obvious effects of size, such as length of electrical cables, which lead to system noise and shielding considerations. An interesting sidelight is that a sort of "universal law" seems to apply in rocket instrumentation. Comparisons have been made with previous programs on the number of flight measurements versus takeoff weight, vehicle cost, and number of engines. On all of these counts, the Saturn vehicles were found to be comparable to the earlier programs.

2. Number of test flights. Because of cost and the established schedules, very few test flights are allotted for launch vehicle development and testing. Following these few flights, we will be "going for keeps" insofar as the launch vehicle is concerned; the vehicle must have been proven reliable and the primary mission shifted to test of other things, such as the Apollo spacecraft. This means that the vehicle designers must obtain all data necessary to confirm their designs (and to analyze any failures) out of these few flights. This tends to press the number of measurements ever upward. The problem then becomes one of accommodating an enormous number of measurements of widely varying requirements for accuracy and frequency response within a finite bandwidth.

The proper mix of telemetry techniques must be selected to make best use of the available bandwidth, consistent with accuracy and reliability.

3. Flexibility. In any vehicle of this size and complexity some design problems are almost bound to occur during the early test flights. The limited number of flights available makes it necessary to be able to shift measurements within a short time to pinpoint the causes of the difficulty. This "quick reaction time" requirement means that we must design for maximum flexibility. We regard this as extremely important. More to the point, we feel that it would be impossible to meet our obligations as instrumentation engineers without this flexibility.

4. Modular, or building-block, approach. All of the Saturn stages utilize some version of a building-block approach in the design of signal conditioning and telemetry equipment. This is related to the previously mentioned flexibility requirement. The modular approach allows us to put together a telemetry system of optimum channel capability for a particular test flight and to rearrange it easily for the next one. However, there are other unrelated benefits, the principal of which is ease of servicing. By breaking the system down into manageable lumps, we are better able to locate, analyze, and correct problems as they occur (and they always do) during factory or launch-site checkout. This may appear a rather primitive consideration, yet it has sometimes been ignored in other programs at considerable expense in both time and money.

5. Flight proved, reliable techniques and hardware. It is almost a cliche to say that the instrumentation equipment must have high reliability. Everyone does his best to see that reliability is designed into the equipment, but that is not enough. We simply cannot afford the time or money to launch additional vehicles to obtain data lost by instrumentation equipment failures. This has led to a rather conservative approach to system design. We do not, and will not, rely on any new telemetry techniques or equipment which have not demonstrated satisfactory performance on flights as "passengers." This is a strong moderating influence when considering some new sophisticated modulation technique, or microminiaturization, or whatever. Such things may turn out to be equivalent in importance to the invention of the wheel, but they will not be used until we have actually demonstrated reliable flight performance of equipment incorporating such techniques.

6. Automatic checkout and launch. The launch control center for Saturn V will be 5 to 8 kilometers from the launch pedestal because of the tremendous quantities of propellants involved and the sound pressure levels expected. Final checkout for launch must be conducted by remote, electrical

means. We must be able to verify that all systems in all stages are functioning properly and are in a ready-to-launch condition. In addition we have imposed on ourselves a requirement to locate malfunctions to a subsystem level and to a "black box" level where practical.

The obvious effect is an increase in the number of points monitored and in the amount of data to be collected, observed, and digested while proceeding with the launch sequence. It has become the practice in all recent rocket systems in the United States to have the final launch sequence automatic. To be able to digest the amount of data and to keep pace with automatic sequencing, both tasks are delegated to a digital computer.

The above state of affairs is probably the single factor having the greatest influence on Saturn instrumentation system design. The effects are these:

a. A large number of measurements are made for ground check-out purposes only.

b. The instrumentation system itself is designed so that it can be functionally verified remotely, electrically, and automatically; not only because it is one system among others, but also because we must rely on it to accurately determine the status of all other vehicle systems.

c. The telemetry design is such that, during checkout, nearly all data available on the vehicle may be encoded and transmitted to ground equipment in digital form, to be readily compatible with automatic data handling equipment.

MEASURING AND TELEMETRY

The Saturn I is being utilized as a test bed for instrumentation techniques which are scheduled for implementation in the Saturn IB and Saturn V. Many experimental and passenger items are being flown for this purpose. Because the Saturn V represents the ultimate embodiment of all the techniques and equipment planned, we will use it as the basis for our discussion. It incorporates everything planned in the Saturn IB.

The combined measuring and telemetry system of the Saturn V launch vehicle measures physical quantities and signals onboard the vehicle and transmits the data to ground stations. The data transmitted by the measuring and telemetry system supply the information for the following:

1. Automatic preflight checkout of the vehicle

2. Monitoring of vehicle performance during powered flight

3. Postflight evaluation of vehicle performance

4. Monitoring and checkout of the vehicle during orbital flight

5. Verification of commands received in the vehicle from ground stations.

Figure 4 illustrates the signal flow through the system. The transducers convert the physical quantities to be measured (e.g., pressure, temperature, etc.) into electrical signals. These transducer signals are modified by signal conditioning devices into voltages suitable as inputs to the telemetry system. The measuring distributor feeds the conditioned transducer signals to the telemetry system where the signals are modulated on radio frequency (RF) carriers and transmitted to the telemetry ground stations. Before launch, the measuring and telemetry system provides digital data by coaxial cable from each stage of the vehicle to the checkout facility. The digital information is used for automatic checkout of the vehicle on the launch pad. This data output of the telemetry system is called the digital data acquisition system (DDAS) output.

Each stage of the launch vehicle has an independent measuring and telemetry system, DDAS output, and RF transmission. The telemetry system of the S-IVB stage is also connected to the flight computer in the IU.

Measuring. The measuring system includes transducers, signal conditioners, and measuring distributors. Figure 5 illustrates typical components of the measuring systems. The measurements in the launch vehicle cover the following areas:

1. Propulsion

2. Structure

3. Flight mechanics

4. Guidance and control

5. Environment

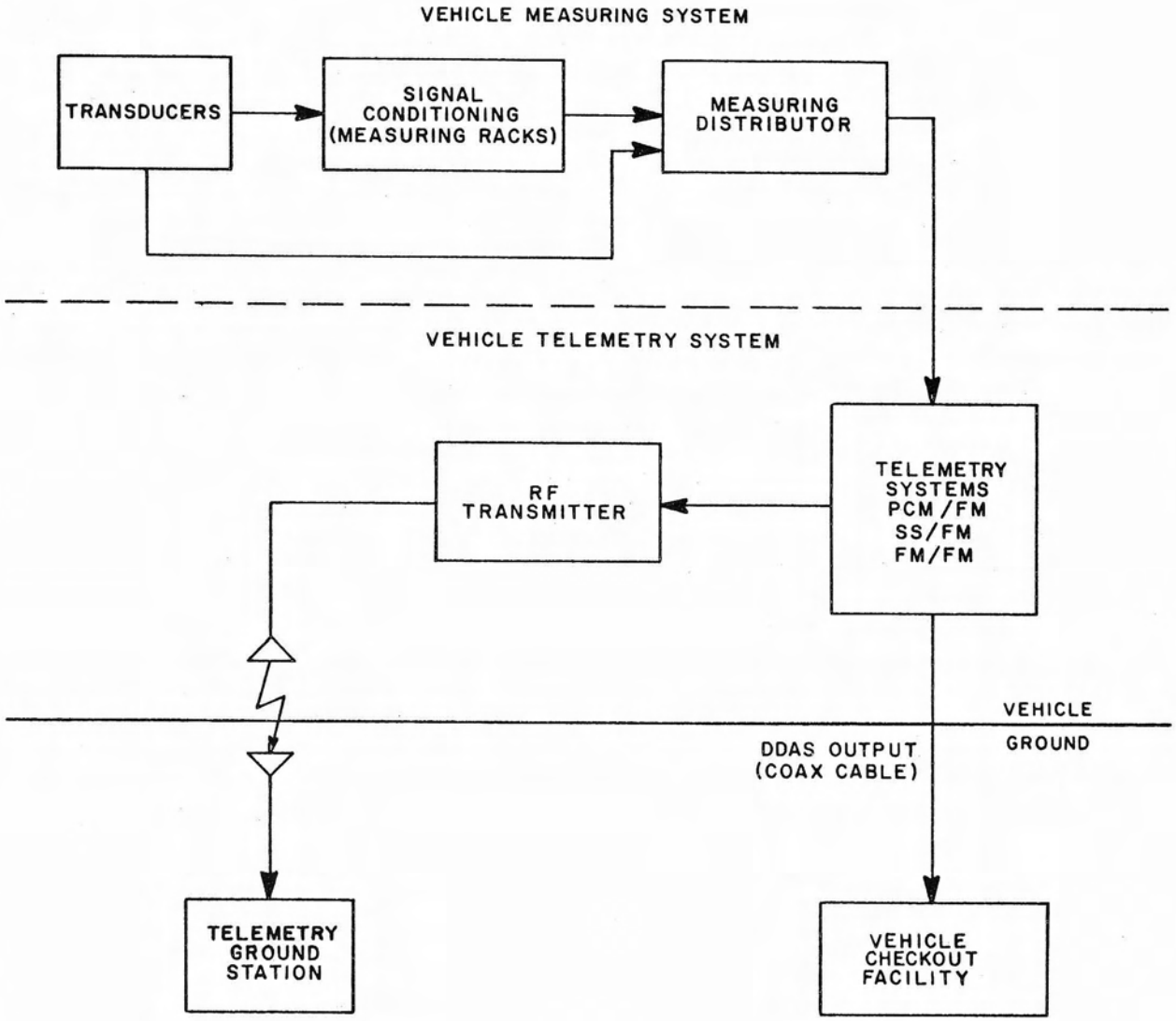

FIGURE 4 MEASURING AND TELEMETRY SYSTEM

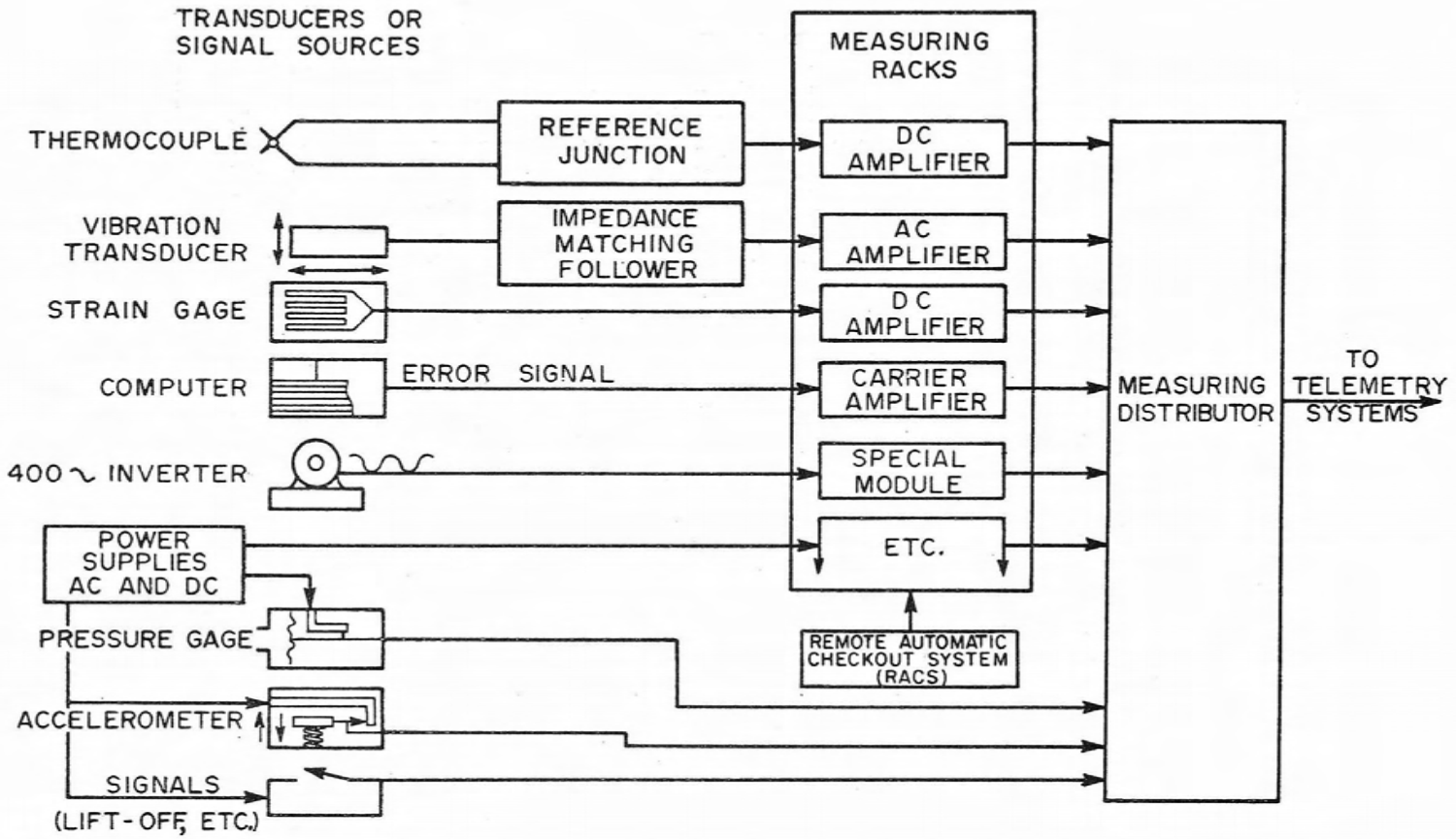

FIGURE 5 SATURN V MEASURMENT SYSTEM

The following is a discussion of the measuring system for the S-IC stage. Measuring systems in the other stages and the IU are similar but not identical to those in the S-IC stage.

The measurements may be divided into two groups. In the first group, physical quantities such as pressure, temperature, and vibrations are transformed by transducers into electrical signals for transmission. The second group of measurements are signals (voltages, currents, and frequencies) which are used for monitoring the performance of onboard equipment and the sequence of flight events (e.g., stage separation, engine cutoff, and others). The signals to be measured exist in analog and digital form.

Transducers. The transducers are precision electromechanical measuring instruments containing sensing devices carefully designed for accuracy, reliability, and resistance to unfavorable environment. Evaluation of vehicle performance and inflight monitoring requires the measurement of a large variety of physical quantities onboard the vehicle. Therefore, many different types of transducers are used. This variety and complexity precludes detailed description here.

Signal conditioning. Signal-conditioning modules are employed to adapt the outputs of the transducers to the electrical input requirements of the telemetry system. The modules are mounted in measuring racks which provide flexibility and ease of maintenance. Certain transducers have output signals which do not require signal conditioning. These signals are fed directly to the measuring distributor.

The power input is 28 volts dc. Most modules contain isolated regulated power supplies for transducer excitation. The design of the plug-in printed circuit board enables amplified adaptation to several different types of measurements and changes in the range of measurements. This printed circuit board also includes transducer-simulating circuits for calibration purposes. There are four standard modules. These are as follows:

1. AC amplifier

2. Carrier amplifier

3. Narrow-band dc amplifier

4. Wide-band dc amplifier

Alternating current amplifier. The ac amplifier is a relatively wide-band ac amplifier with a frequency response of 10 to 3100 Hz. The amplifier input impedance is 10,000 ohms, which is compatible with standard sensing devices in common use.

The output signal is a waveform that is linear from 0 to 5 volts peak to peak. A bias is applied at the output of the amplifier to provide a zero offset of 2.5 volts at the center frequency. The output signal is then applied to the 0 to 5 volt, voltage-controlled, subcarrier oscillator (SCO) or to the single sideband/frequency modulation system (SS/FM). A signal-limiting device at the output of the amplifier prevents crosstalk or interference with other channels which could result from overdriving the subcarrier oscillator. Two types of gain control are provided in this unit: a step type and a continuous control. These are connected in series and may vary the gain from 1 to 240.

Carrier amplifier. The carrier amplifier is used primarily to amplify error signals from servo loops. It can also be used for strain measurements or other transducers which can utilize 400 Hz excitation. This amplifier is similar to the vibration amplifier, but has a phase sensitive demodulator and a low-pass LC filter at the output. The gain control is the same as for the vibration amplifier.

Narrow-band dc amplifier. The narrow-band dc amplifier is used primarily to amplify low-level signals in the millivolt range which may be derived from thermocouples, resistance thermometers, thermistor bridges, or similar transducers. Solid state choppers are used to solve the drift and low reliability problems normally associated with amplification of low-level dc signals. A 10-volt regulated independent supply is provided for use with thermistor, resistance thermometer, and strain-gage bridges. This voltage may also be used (for thermocouples) for the artificial reference junction. The bridge is located on the signal-conditioning plug-in board. Maximum gain of this narrow band dc amplifier is 1000.

Wide-band dc amplifier. The dc amplifier is energized by a 28-volt dc source and operates in essentially the same manner as the narrow-band dc amplifier. The frequency response is 0 to 3 kHz.

Measuring distributor. The measuring distributor is similar to a junction box. All measurements in the measuring system are connected to the distributor and are directed to their pre-assigned channel. The distributor provides versatility in changing channel assignments, with the changes being made by

physically rearranging jumper wires within the measuring distributor. This versatility eliminates extensive cable changes and allows channel changes to be made just prior to launch.

Remote automatic calibration system (RACS). The remote automatic calibration system(Fig. 6) enables a remote calibration of the flight instrumentation system and equipment used for maintaining the functional readiness of the vehicle, thus affording a great savings in time during launch preparations. The need for technicians to climb about the interior of the vehicle is reduced by the use of the automatic calibration system.

Each signal-conditioning module contains two relays and the necessary circuits to simulate the transducer as well as the upper (Hi) end and the lower (Lo) end of the calibrated range for the measurement. The transducer is connected to the module in the run mode.

A control panel in the launch control center (LCC) allows selection of the desired measurement module in the vehicle and the calibration mode (Hi, Lo, and Run). This is accomplished by sending a binary-coded signal from the LCC through the umbilical cable to the stage. Any number of channels can be selected and energized in any of the three modes, individually or in a random sequence.

Each of the signal-conditioning amplifiers has push-buttons on the front of the module for manual operation of the calibration inside the vehicle. The system may be operated from the LCC computer, or other programing device, or manually. Data readout and display equipment is provided in the LCC.

Emergency detection system. A special category of measurements comprise the emergency detection system (EDS). The purpose of these measurements is to warn the astronauts in the spacecraft that an escape, or "abort," action may be required because of some failure in the booster. These measurements are selected on the basis of a failure effect analysis. That is, one asks, "What will happen if this device fails? Then what happens next? And next?" Although there are thousands of individual failures which could affect the vehicle performance, only a relatively few can abort the mission or cause a catastrophic event. In addition, many of these have the same eventual effects, such as loss of thrust, loss of altitude control, explosion, etc. This allows only a few parameters to be monitored, and yet still affords reasonable protection. The measurements selected are then categorized as "manual abort" or "automatic abort." The manual abort signals are routed from the launch vehicle to the spacecraft for visual display to the astronauts. The automatic abort measurements are those which indicate a catastrophe has occurred or

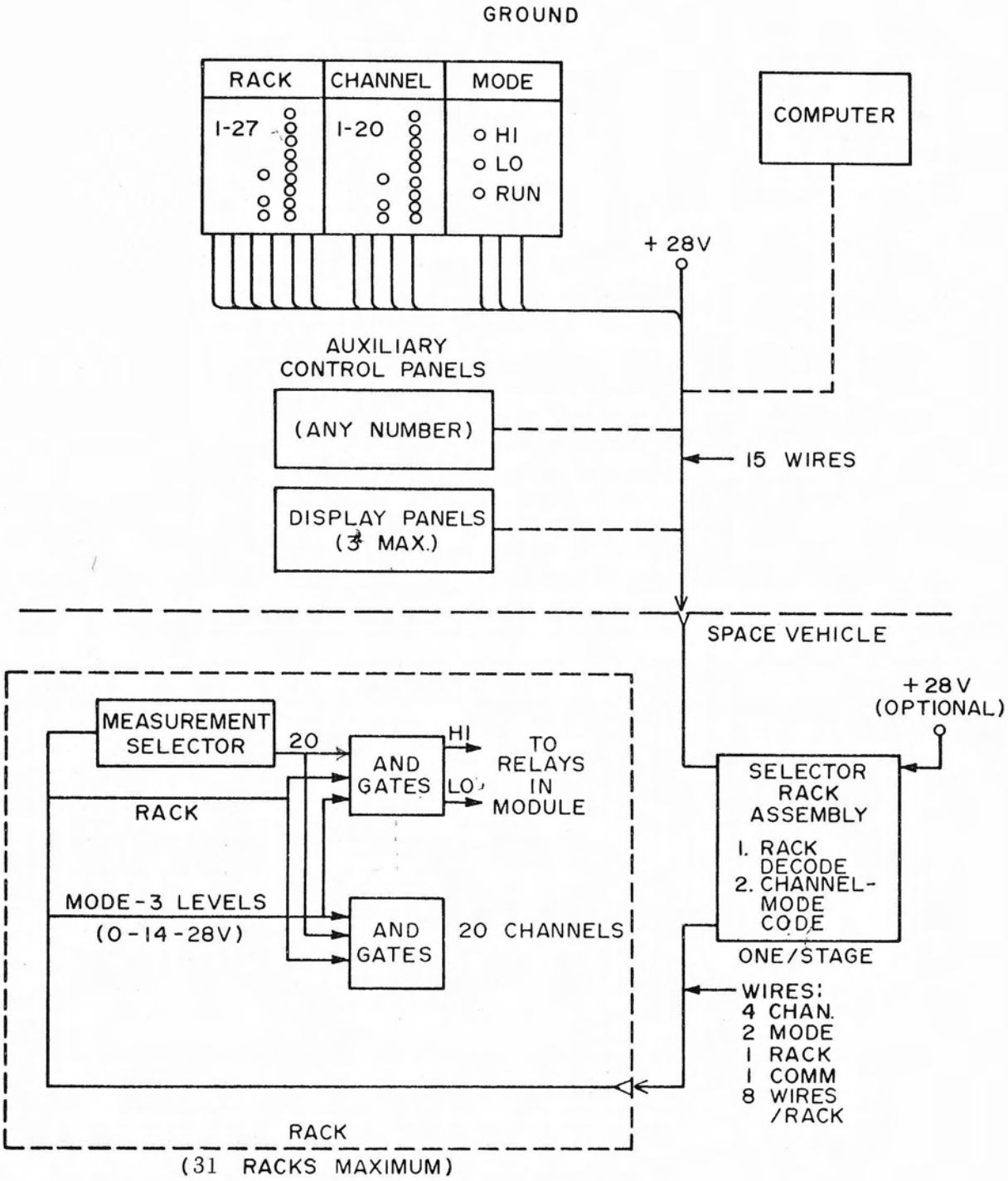

FIGURE 6 REMOTE AUTOMATIC CHECKOUT SYSTEM BLOCK DIAGRAM

will occur in less time than a human could react. In such cases, the capsule is separated and the escape rockets ignited automatically.

For obvious reasons, extraordinary measures are taken to insure reliability of transducers used for EDS. In addition, redundancy and voting techniques are employed to guard against a failure to indicate, or a false indication of, an abort situation.

The EDS measurements are telemetered from the stage in which they originate. They are also telemetered from the IU after processing by the voting logic located there. The chart in Figure 7 shows the number of measurements in several categories for each stage. These numbers apply for a typical vehicle during the early vehicle development launches. As mentioned previously, this very large number of measurements represents a wide variety of accuracy and frequency response requirements. To properly provide for these devices and changing requirements, we must employ a mix of nearly all of the telemetry techniques at our disposal. A discussion of these techniques follows.

Telemetry systems. Each stage of the launch vehicle has an independent measuring and telemetry system with very little interconnection of measuring lines between stages (Figure 8). Before launch, coaxial cables from each stage telemetry system supply digital data to the checkout facility. During flight, the telemetry data are radiated from separate antenna systems on each stage. The data adapter in the IU has access to telemetry data from both the IU and S-IVB stage. In the telemetry system, the conditioned measuring signals are modulated on radio frequency carriers. Some measuring signals, e.g., vibration measurements, require wide bandwidths while other measurements that change very slowly require narrow bandwidths. The measurements, when grouped according to frequency and accuracy requirements, can be most effectively transmitted by employing different types of multiplexing techniques, both time-division and frequency-division, such as:

PAM/FM/FM	=	Pulse Amplitude Modulation/Frequency Modulation/Frequency Modulation
FM/FM	=	Frequency Modulation/Frequency Modulation
SS/FM	=	Single Sideband/ Frequency Modulation
PCM/FM	=	Pulse Code Modulation/Frequency Modulation

PARAMETER	SIC	SII	SIVB	IU	TOTAL
PRESSURE	242	174	30	27	473
TEMPERATURE	222	251	104	70	647
VIBRATION	82	76	22	29	209
ELECTRICAL SIGNALS	97	235	26	5	363
POSITION	1	34	9	20	64
VOLTAGE / CURRENT / ECT.	11	46	32	13	102
STRAIN	68	16	12	0	96
LEAK DETECTION	60	65	0	0	125
FLOW RATE	106	10	2	11	129
RPM	5	10	2	0	17
PROPELLANT MASS / LEVEL	8	6	6	0	20
ACCELERATION	3	2	1	7	13
ACOUSTIC	4	5	6	1	16
ANGULAR VELOCITY	3	3	0	27	33
GUIDANCE & CONTROL	0	0	0	69	69
RF & TM	0	0	0	55	55
MISCELLANEOUS	0	0	0	8	8
TOTAL	912	933	252	342	2439

FIGURE 7

SATURN V MEASURING REQUIREMENTS

(VEHICLE SA-503)

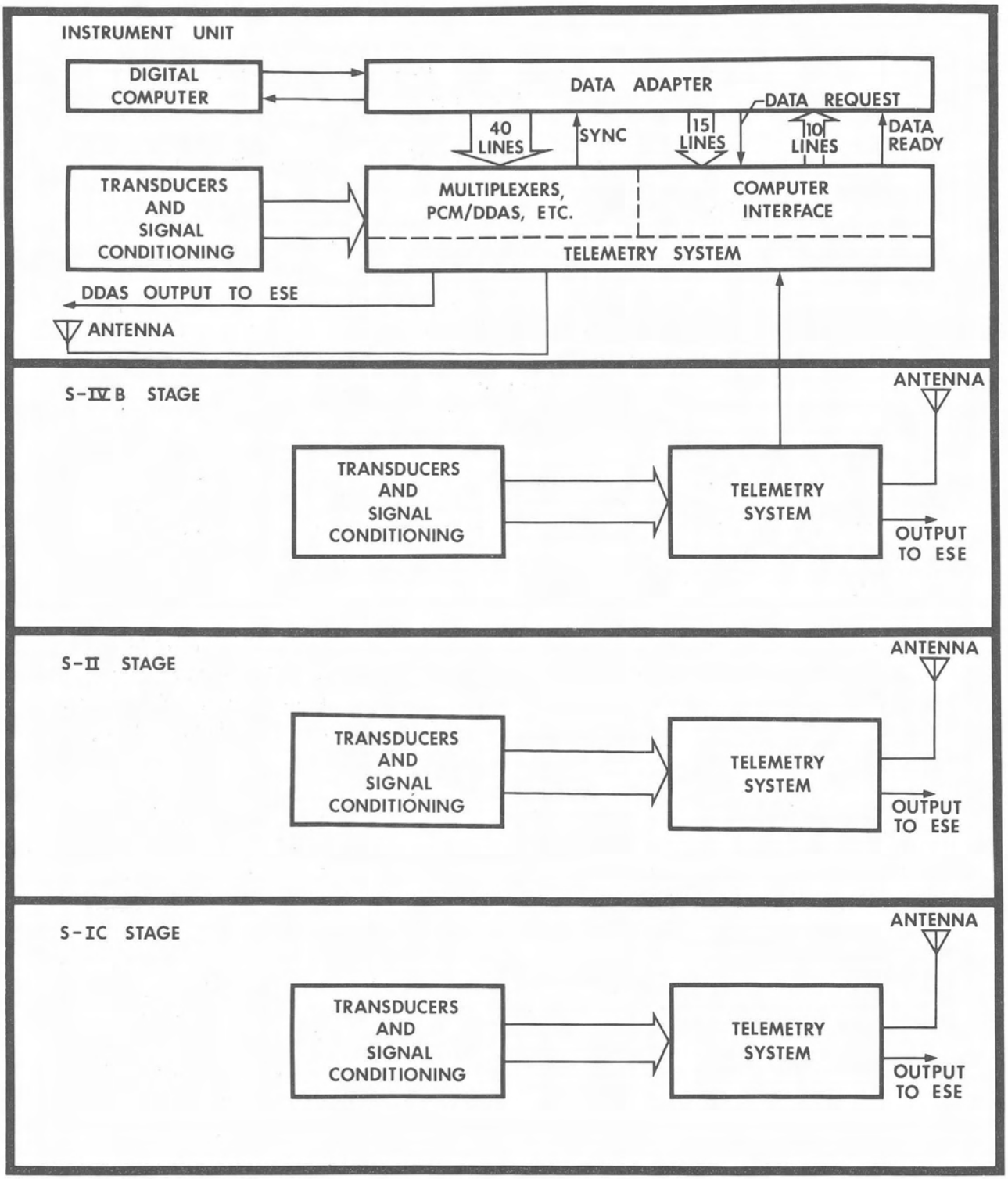

FIGURE 8 SATURN V TELEMETRY SYSTEM

Multiplexing. In general, each stage data system utilizes three telemetry multiplexing techniques on multiple RF carriers:

(1) FM/FM, with PAM and Triple FM as auxiliary techniques

(2) SS/FM

(3) PCM/FM

The number of RF carriers utilizing each technique is chosen to provide a balanced-data transmission capability for the variety of data types originating on the stage. A typical stage of the research and development vehicle requires 500 to 800 measurements varying in frequency response requirements from very low to 3000 Hz.

The telemetry equipment associated with a Saturn V stage consists of a "building-block" arrangement, which may be connected in numerous combinations to satisfy specific requirements. A typical stage telemetry system is illustrated in block diagram form in Figure 9.

Data with medium frequency response characteristics (50 to 1000 Hz) are applied to voltage-controlled oscillators (VCO's) of the FM/FM assemblies. In some cases, lower frequency VCO outputs are modulated onto higher frequency VCO's to increase the number of available VCO data channels. This technique is referred to as Triple FM (FM^3).

Vibration and acoustic data channels are typically applied to channels of the SS/FM assembly. These channels transmit a data spectrum from 30 to 3000 Hz. The number of SS/FM channels available is expanded by time-sharing specific channels through a slow time-division multiplexer (three or six seconds per contact).

From one to six time-division multiplexers are synchronized from a central timing source located in the PCM/DDAS assembly. Each time-division multiplexer provides an output to the PCM/DDAS assembly which combines the outputs into a single serial wavetrain. The individual analog samples are digitized and combined into a serial digital format which is transmitted via coaxial cable to the ground checkout equipment. Data are also transmitted via a PCM/FM carrier for inflight monitoring.

Each of the time-division multiplexers has a second data output which is identical to the output provided to the PCM/DDAS assembly except that it is

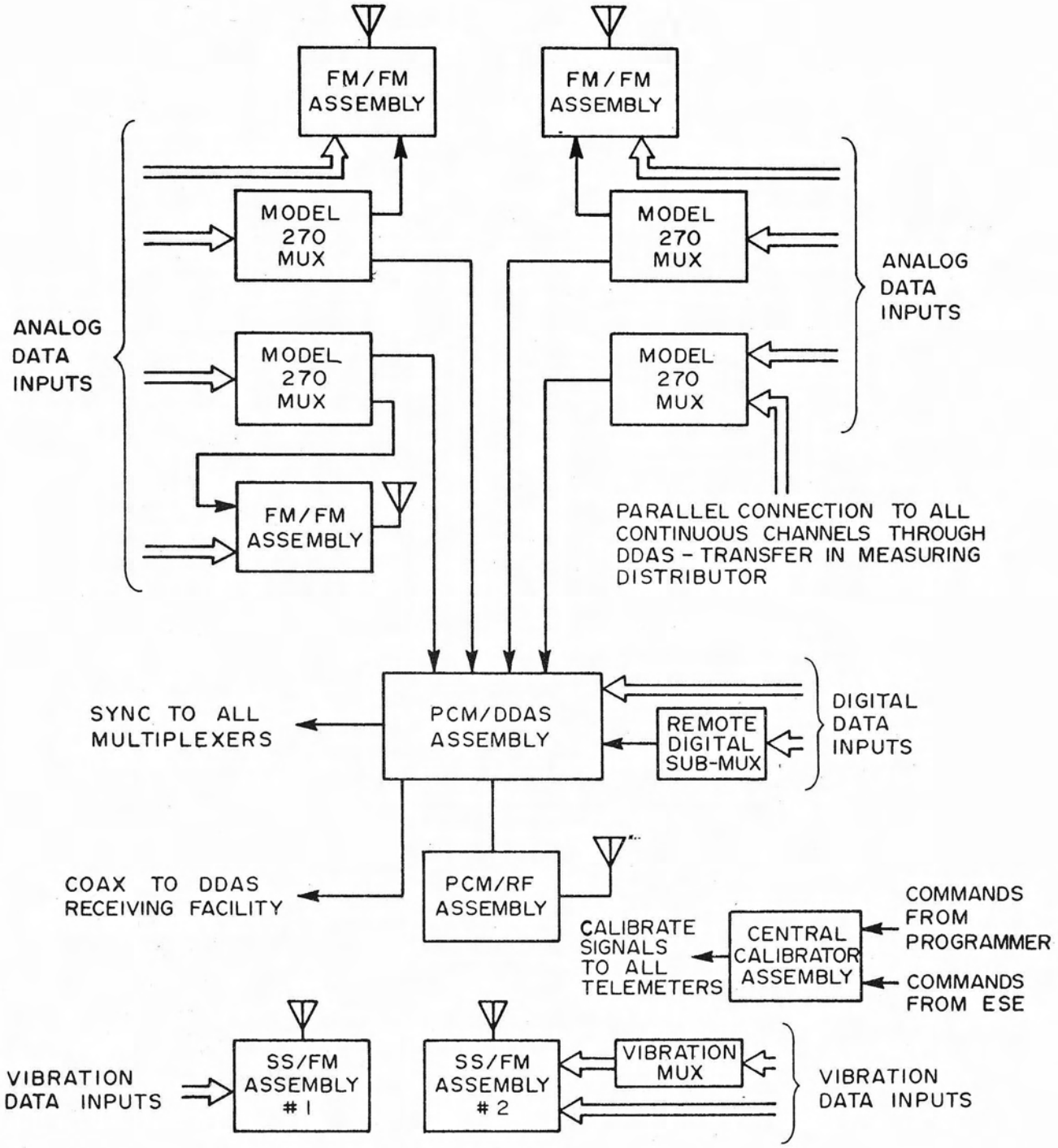

FIGURE 9 TYPICAL SATURN V STAGE TELEMETRY SYSTEM

conditioned for PAM transmission. These outputs may modulate a 70 kHz voltage-controlled oscillator in FM/FM telemeter assemblies. This arrangement provides the capability of redundant transmission of some multiplexer outputs using both PAM and PCM techniques.

Data that originate in digital form are inserted into the PCM/FM and DDAS outputs of the telemetry system. The number of digital input channels available in the PCM/DDAS assembly is expandable by adding remotely-located digital submultiplexers.

Digital data acquisition system (DDAS) is a function associated with Saturn V PCM telemetry and is utilized in both preflight and flight phases. During preflight checkout, the telemetry system presents data over coaxial cables to one or more locations remote from the vehicle. These measurements are available to digital computers in real time through a special data-receiving facility interfaced with the computers. The data-receiving facility also provides outputs for display of selected channels and tape records the DDAS outputs for analysis at a later time.

During flight, the DDAS function is performed between the telemetry system, data adapter, and digital computer. Upon request, data in digital form are made available to the digital computer during flight and are used by the digital computer to perform vehicle checkout. Thus, the "digital data acquisition system" refers to the use of the capabilities inherent in PCM/FM telemetry to provide a communications link between the vehicle instrumentation system and ground checkout equipment or the airborne computer.

The equipment utilizing the above techniques, as integrated into a typical system as shown in Figure 9, will now be discussed in more detail.

Frequency modulation/frequency modulation system. The FM/FM system configuration for each vehicle stage is selected to accommodate the particular types and amounts of measurements unique to a stage. The basic modulation scheme and principal components used (subcarrier oscillators, mixer, power amplifier, and transmitter) are essentially the same for each stage FM/FM system. Figure 10 shows a typical Saturn stage FM/FM system.

The signal flow through the system is essentially the same for each channel. The channel receives a signal from the measurement system. When the measurement source signals are unsuitable for direct input to the FM/FM telemetry, signal-conditioning devices are used. The input signal frequency modulates a

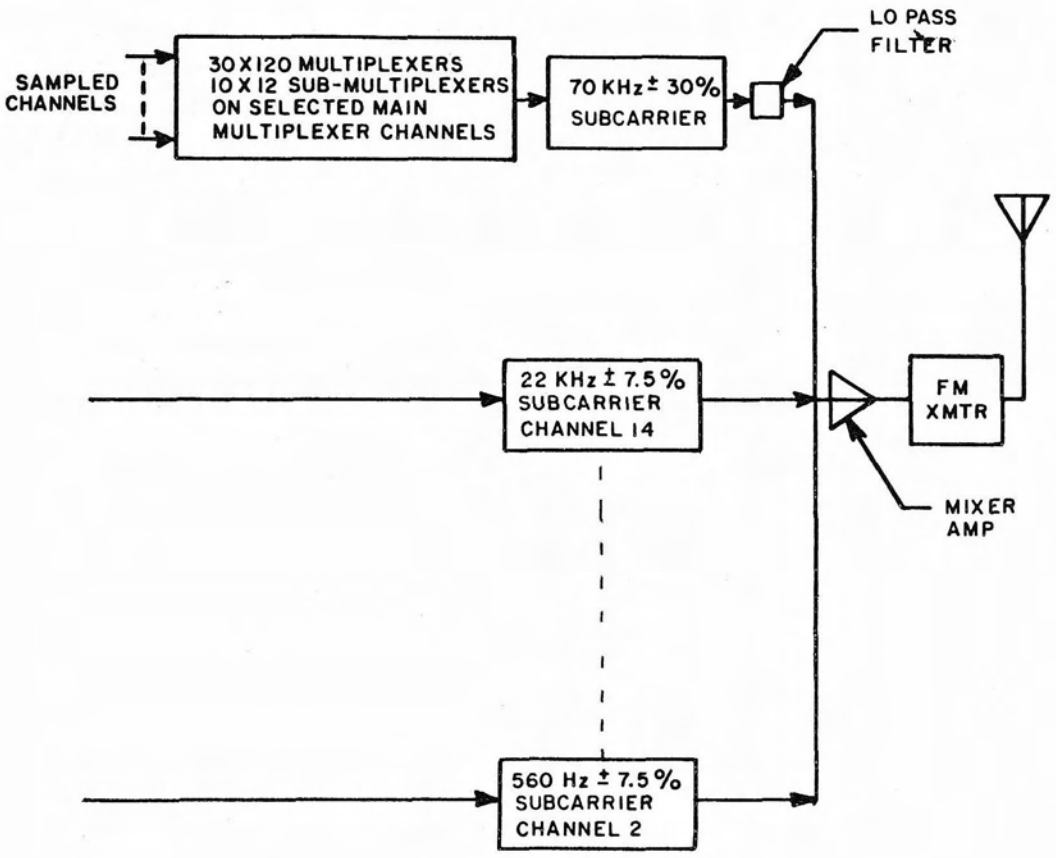

FIGURE 10 TYPICAL SATURN V FM/FM TELEMETRY SYSTEM

voltage-controlled subcarrier oscillator which modulates the FM transmitter. The RF power amplifier amplifies the FM/FM output signal to a 20-watt level. The frequency of transmission in the VHF band is from 225 to 260 MHz.

PAM and FM^3 techniques are applied to specific subcarriers to expand channel capacity when required. PAM modulation, when used, is at a pulse rate of 3600 samples per second and is modulated onto a 70 kHz wideband VCO deviated ± 30 percent. All IRIG channels above 30 kHz must be eliminated when this technique is used. When PAM is not utilized on a specific FM/FM link, the IRIG channels 2 through 18 are used. FM^3 modulation is typically applied on any IRIG channel above 13 when required.

During checkout, all data inputs to the continuous (non-sampled) FM/FM channels can be paralleled into a PAM multiplexer. The output of the multiplexer is then combined with other sampled data by the PCM/DDAS assembly for transmission by coaxial cable to the ground. During this time period, all data sources are essentially static or slowly changing, and therefore no "aliasing" problems occur. This capability allows these data to be scanned by the ground checkout equipment in the same digital format as the sampled data.

Single sideband/frequency modulation system. The SS/FM telemetry system (Figure 11) is designed specifically for transmission of the large volume of vibration data from the Saturn vehicle. This system can transmit 15 channels, each having a response of 30 to 3000 Hz, for a total data bandwidth of approximately 45 kHz within the standard telemetry RF carrier bandwidth.

Each of the 15 data inputs is fed to a balanced modulator and heterodyned with a 455 kHz carrier. The output of the modulator is fed to a mechanical bandpass filter (455 to 458 kHz) which passes the upper sideband. The output of the filter is fed to a second balanced modulator where it is translated to the proper baseband frequency. The baseband position is determined by the carrier supplied from the frequency synthesizer. The two balanced modulators and the mechanical bandpass filter for each data channel make up the channel units, which are identical for all channels. The outputs of the 15-channel units are mixed and amplified to the proper level to modulate the FM transmitter.

The frequency synthesizer generates the 15 carriers for the second modulator and a 75.88 kHz pilot tone for the ground equipment. To provide a 3-kHz information bandwidth and allow sufficient guardband, a channel spacing of 4.74 kHz is used. This spacing is convenient to generate in the synthesizer and allows adequate guardband of 1.74 kHz. The 75.83-kHz pilot tone falls just

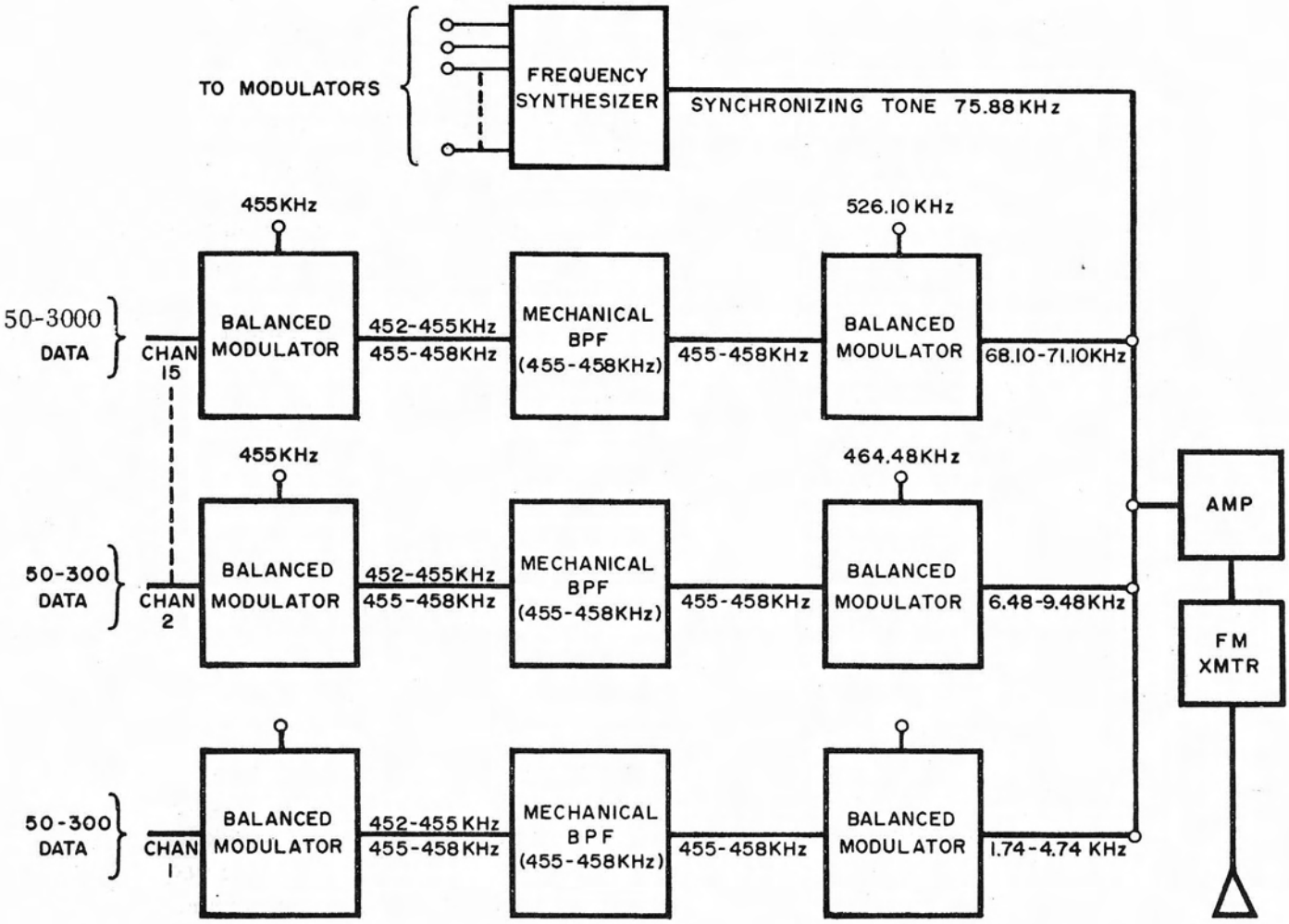

FIGURE 11 SS/FM TELEMETRY SYSTEM FOR VIBRATION AND OTHER WIDEBAND DATA

above the highest baseband frequency. It is used as a reference in the ground demodulation equipment to regenerate the basic 455 kHz and 4.74 kHz. Since the amplitude of the transmitted 75.83-kHz pilot is regulated, it is also used as an automatic gain control (AGC).

The SS/FM is used in conjunction with a vibration multiplexer to expand its data-handling capability by time-sharing specific data channels.

Digital telemetry techniques. Digital telemetry techniques are utilized on the launch vehicle for the following functions:

(1) Monitoring of data sources that originate data in digital form

(2) Monitoring of data required for real time evaluation

(3) Monitoring of analog data sources requiring accuracy, but which are not compatible with analog telemetry techniques

(4) Primary transmission (without back-up) of up to 20 percent of the sampled data originating on a stage

(5) Redundant transmission of sampled data which are also transmitted by PAM techniques.

Some of the digital data sources that are monitored are as follows: a digital guidance computer, a horizon sensor, a radar altimeter, an IU command system, propellant level sensors, a fire detection system, a tracking system, and numerous sources of discrete (off-on) functions. The data required for real-time monitoring for determination of vehicle readiness are provided in digital form on a 600-kHz carrier transmitted from the vehicle via coaxial cable.

A central telemetry assembly (the PCM/DDAS assembly) (Figure 12) provides the following functions:

(1) Scans the PAM wavetrains of several PAM multiplexers in a programed sequence and combines these wavetrains into a single PAM wavetrain.

(2) Encodes into 10-bit digital form the PAM samples in this wavetrain.

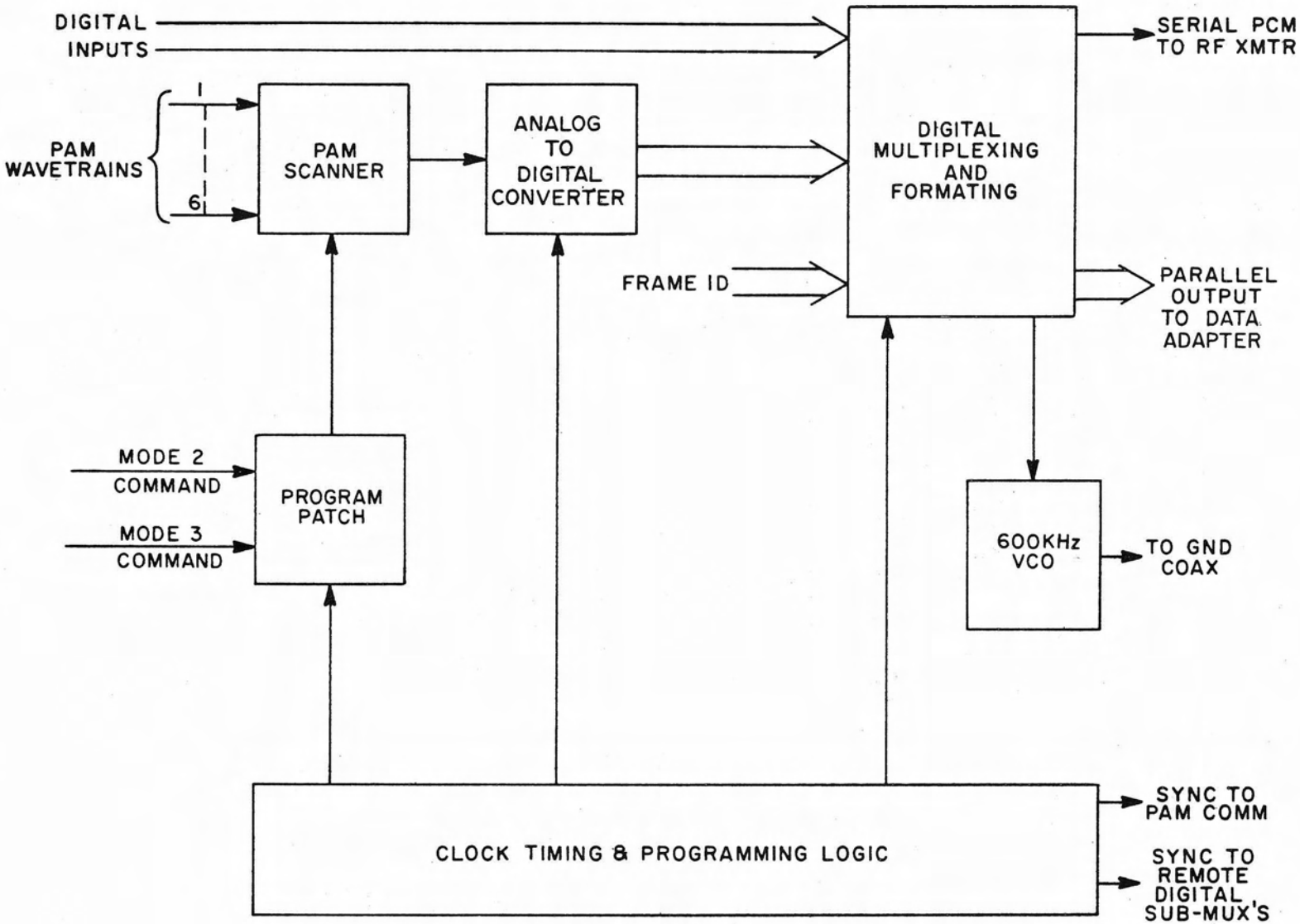

FIGURE 12 GENERAL BLOCK DIAGRAM PCM/DDAS ASSEMBLY

(3) Accepts data in digital form and programs them into selected time slots in the output serial format.

(4) Generates the required frame and master frame identification codes, combines these codes with the digital and encoded analog data, and arranges the desired serial format for output.

(5) Provides a 600-kHz FM modulated carrier as the DDAS output and an NRZ modulating output for the PCM/RF assembly.

(6) Provides the synchronization outputs necessary to synchronize multiplexers and remote digital submultiplexers.

The PCM/DDAS assembly in Figure 12 is composed of the six functional subsystems listed below:

(1) PAM scanner (an associated program patch)

(2) Analog-to-digital converter (ADC)

(3) Digital multiplexing and formating logic

(4) Clock timing and programing logic

(5) DDAS voltage controlled oscillator (VCO)

(6) Power supplies

Data adapter. During orbital checkout, which is initiated by a command signal to the digital computer via the IU command, the digital computer requires a real-time value of measurements, which are part of the total measurements being telemetered by the S-IVB/IU stage telemetry system. The computer provides a 15-bit address identifying the specific measurement value required by the IU telemetry system. The computer also supplies a data-request signal.

Upon receipt of the address and data request, the IU telemetry scans its own stored addresses until a correct comparison is obtained. The telemetry then seeks the required data. When the telemetry system obtains the correct data, it puts the data, a 10-bit word, into an output register, then provides a "data-ready" signal to the data adapter. When the computer receives the "data-ready" signal, it branches to a subroutine which operates to transfer the data from the telemetry output register to the data adapter. The data adapter

and digital computer insure that a new address with a valid read bit is not generated until data from the telemetry output register have been received in response to the previous address.

During the launch, earth orbiting, and lunar-injection phases, there are times when information processed by the computer is desired at the ground station. Also, during periods when specific commands are being given through the IU command to the digital computer, it will be necessary to transmit the particular command to ground for verification prior to processing by the digital computer. Since the information to be telemetered is dependent on particular missions and has a random characteristic, provision will be made in the telemetry to accommodate these outputs. Specific PCM telemetry system channels are assigned to accommodate the 40-bit data adapter outputs.

Calibration. A central calibrator assembly provides calibration commands and calibration reference signals to all assemblies. The reference signals are derived from the stage measuring supply. Calibration sequences are of two types: preflight, initiated from ESE; and inflight, which may be initiated either from ESE or the vehicle programer. There are five steps (dc voltage levels) applied to each telemetry line; 0, 25, 50, 75, and 100 percent of full scale (5 V). The calibrator provides up to six outputs to energize the calibrate relays in each telemetry link at the appropriate time.

Inflight calibration is initiated by command from a program device or the computer. Upon command, the calibrator supplies a control signal to a telemetry link which, in turn, transfers its measurement inputs to a calibration bus; simultaneously, the calibrator begins a five-step sequence, which appears on the calibration bus. When the step sequence is completed, the calibrator transfers the control signal to another link and the calibration process is repeated. After all links have been calibrated, the calibrator assumes a quiescent state until the next command is received.

Control console switching in the launch control center sets the central calibrator to a preflight mode. In the preflight mode, the inputs of all units are switched to the calibration bus; therefore, any signal appearing on this bus is applied to all telemetry channels. The calibrator supplies a signal to the calibration bus that may be 0, 25, 50, 75, or 100 percent level or it may be a continuous step sequence of these levels. The calibrator preflight output may be selected from the control console in the launch control center.

FIGURE 13 TELEMETRY SYSTEMS IN THE VARIOUS SATURN V VEHICLE STAGES

STAGE	TELEMETRY SYSTEM	NO. OF RF LINKS	CHANNELS AVAILABLE	TRANSMITTER FREQUENCY	TRANSMITTER POWER, WATTS
IU	PAM/FM/FM	1			
	FM/FM	1		225-260 MHz	
	SS/FM	1	500		20
	PCM/FM	1			
S-IVB	FM/FM	3		225-260 MHz	
	SS/FM	1	1000		20
	PCM/FM	1			
S-II	PAM/FM/FM	3		225-260 MHz	
	SS/FM	2	1000		20
	PCM/FM	1			
S-IC	PAM/FM/FM	3		225-260 MHz	
	SS/FM	2	1000		20
	PCM/FM	1			

Airborne tape recorder. The primary use of airborne tape recorders in the launch vehicles is for data storage during periods of flight which are not covered by ground stations. The stored data are transmitter upon command when ground station coverage is available.

The tape recorder is also used for critical environmental events occurring during vehicle flight. For example, pertinent data may be paralleled into the tape recorder during retromotor firing when resulting flame attenuation may significantly affect the RF signal transmission. At a later convenient time during flight, the tape recorder playback is used to modulate an RF transmitter. The selection of the number and kind of telemetry links on a given stage, and the detailed makeup of each link, is a function of the data requirements peculiar to that stage. The chart in Figure 13 shows the numbers and kinds of telemetry links which will be used for the early research and development launches of the Saturn V vehicle.

RADIO FREQUENCY SYSTEMS

The radio frequency (RF) systems of the Saturn V launch vehicle provide the functions of tracking and command. Because most of these systems operate independently from the total instrumentation system, all pertinent data of the RF system are included in this section.

Tracking. The purpose of tracking is (1) to determine vehicle trajectory for mission control, (2) for postflight evaluation of the vehicle performance, and (3) for range safety. Several tracking systems are used to determine the trajectory during powered ascent and orbital flight. Consolidation of tracking data from the several tracking systems provides the best possible trajectory information and increases the mission reliability through redundance of data. Not all tracking transponders discussed here will be included on every mission. Continuous tracking during powered flight is required. Because of the long burning time of the multistage vehicle, the powered flight cannot be "seen" completely from land-based tracking stations. The use of tracking ships is necessary to track injection into orbit. Figure 14 shows the location of tracking stations used for the power flight phase and indicates the ground projection of the trajectory for the limit azimuths of 72 degrees and 108 degrees.

Command. The command systems on the launch vehicle provide a communication link to transmit commands from ground stations to the vehicle

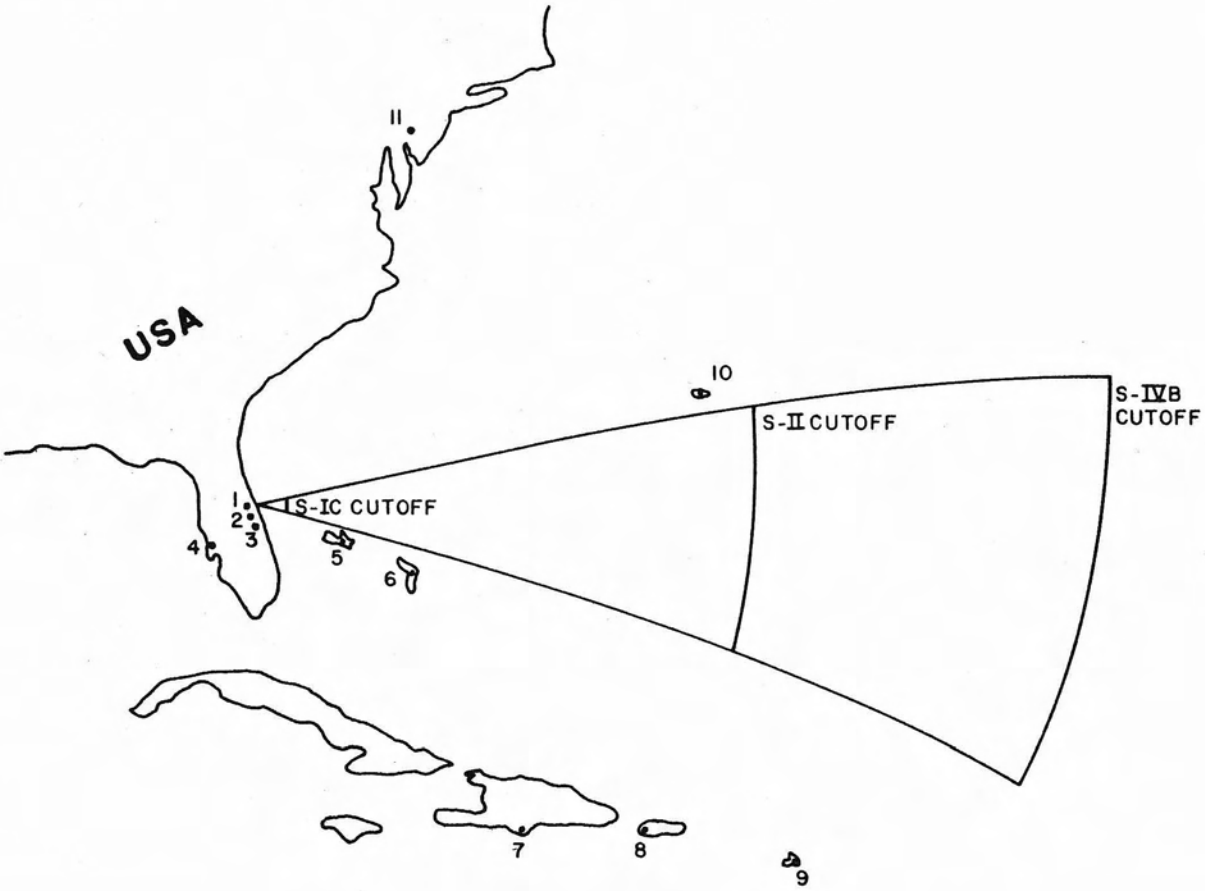

TRACKING STATIONS

1. CAPE CANAVERAL
   ODOP
   AZUSA
   C-BAND RADAR
2. PATRICK AIR FORCE BASE
   C-BAND RADAR
3. VALKARIA, FLORIDA
   MISTRAM
4. FORT MEYERS
   MINITRACK
5. GRAND BAHAMA ISLAND
   AZUSA
   C-BAND RADAR
6. ELEUTHERA
   MISTRAM
7. SAN SALVADOR
   C-BAND RADAR
8. PUERTO RICO
   C-BAND RADAR
9. ANTIQUA
   C-BAND RADAR
10. BERMUDA
    C-BAND RADAR
11. BLOSSOM PT., MARYLAND
    MINITRACK

FIGURE 14 SATURN V TRACKING STATIONS ASSOCIATED WITH POWERED FLIGHT

during flight. Two different command systems are flown on the vehicle:

(1) The range safety command system is used to terminate vehicle flight by propellant dispersion, should a vehicle malfunction occur.

(2) The IU command system is used to update guidance information stored in the onboard guidance computer to initiate checkout of the vehicle in orbit and to command vehicle functions.

Tracking systems

C-band radar. The SST-102A C-band radar transponder is flown on the launch vehicle. The transponder, used as a tracking aid, increases the range and accuracy of C-band radar ground stations equipped with AN/FPS-16 and AN/FPQ-6 radar systems. C-band radar stations at Cape Kennedy, along the Atlantic Missile Range and at many other locations around the world, provide global tracking capability.

As many as four radar stations may track the beacon simultaneously. The transponder receives coded or single-pulse interrogation from ground stations and transmits a single-pulse reply in the same frequency band. A common antenna is used for receiving and transmitting.

The radar ground station determines position of the vehicle transponder by measuring range, azimuth angle, and elevation angle. Range is derived from pulse travel time and angle tracking is accomplished by amplitude-comparison monopulse technique.

Missile trajectory measuring system (MISTRAM). The MISTRAM system is the latest tracking system installed at the Atlantic Missile Range. One MISTRAM ground station is located at Valkaria (30 miles south of Cape Kennedy) and a second station is being installed on Eleuthera Island in the Bahamas. The MISTRAM ground stations are able to track the powered flight of the Saturn from launch to approximately cutoff of the S-II stage.

The MISTRAM transponder (RT 612/DRS-3) (Fig. 15) carried in the Saturn vehicle receives two signals which are phase-coherent, CW, X-band signals transmitted from the ground station. These signals are offset in frequency by 68 MHz, amplified, and then retransmitted to the ground station. The phase coherence of the two received signals is preserved through the entire loop operation. The transponder includes a range channel, a calibrate channel, and a power supply. Separate antennas are used for transmitting and receiving.

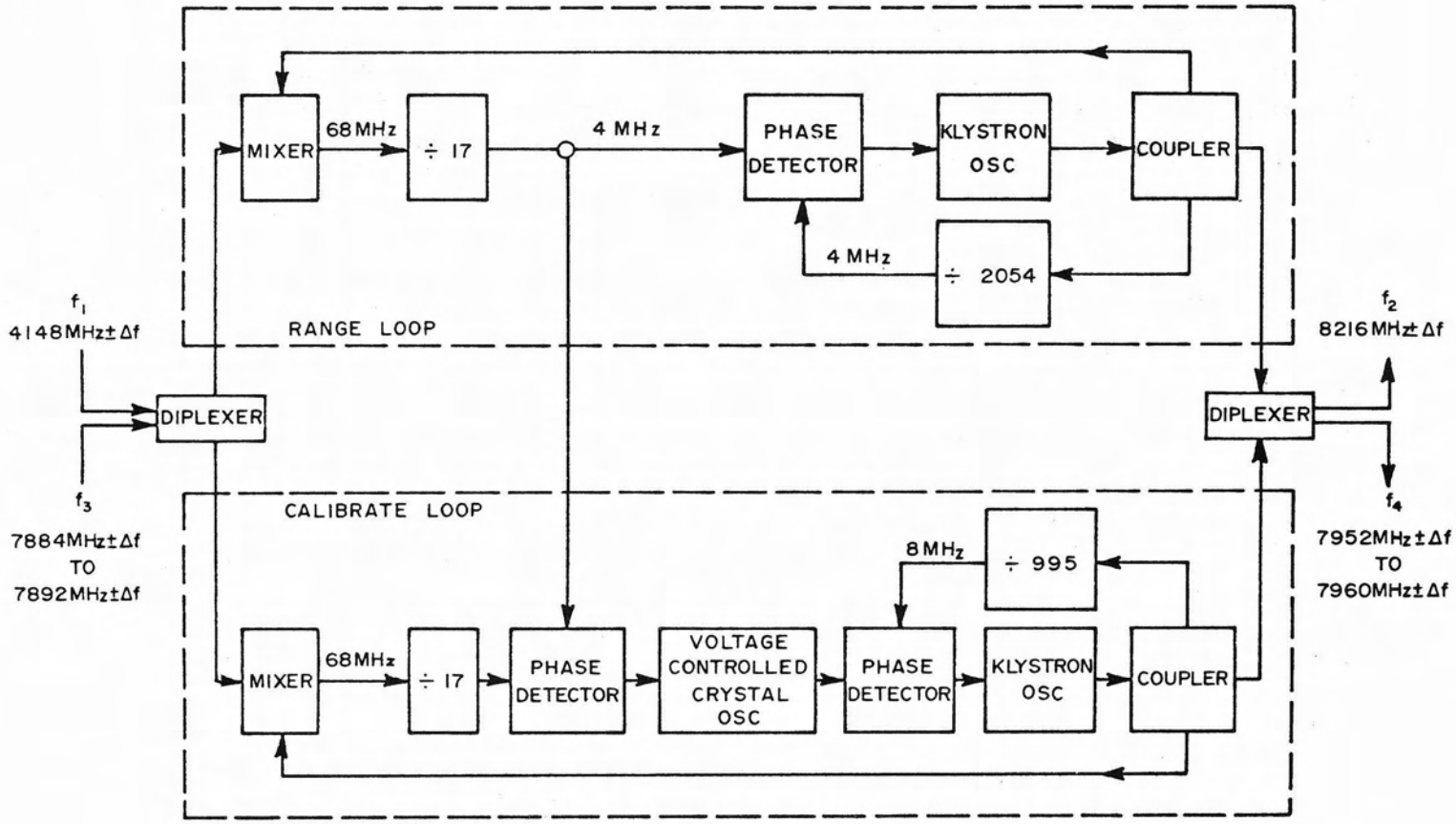

FIGURE 15. MISTRAM TRANSPONDER SUBSYSTEM BLOCK DIAGRAM

The MISTRAM ground station complex consists of a central station and four remote stations arranged to provide two base lines with lengths of about 3,000 meters and 30,000 meters each (Fig. 16).

The central station transmits two CW signals to the transponder in the vehicle. The signals from the vehicle transponder are received at the central station and at the four remote stations. One is a fixed reference frequency; the other is a calibration signal that is periodically swept in frequency for ambiguity resolution. The central station transmitted and received signal phase shift is used for vehicle range determination. The phase shift between signals received at the central station and those received at the remote stations yields range differences from the vehicle to these stations. The vehicle position is computed from measured range and range difference data. The velocity of the vehicle is obtained by numerical differentiation of the range-difference data in an external computer. The MISTRAM system provides data in real time.

Offset frequency doppler system (ODOP). The ODOP tracking system is a frequency modification of the UHF doppler system (UDOP). It is a multistation doppler tracking system with one station complex located at Cape Kennedy. Tracking from ODOP stations is limited to the first portion of powered flight (S-IC stage). ODOP tracking data are provided immediately following vehicle lift-off. Other tracking systems cannot "see" the vehicle immediately following lift-off, or their accuracy is limited by multipath propagation.

The vehicle-located ODOP transponder receives a CW signal of 890 MHz transmitted from the ground station. The received signal is offset in frequency to 960 MHz and retransmitted phase-coherent with the receiving signal to the ground stations. Separate antennas are used for receiving and transmitting. A block diagram of the transponder is shown in Figure 17.

The ODOP tracking system determines vehicle position by using doppler frequency measurements. A minimum of three receiving stations is necessary to determine position; additional ground stations are employed to receive redundant data.

The doppler frequency shift of the received transponder signal is measured in each of the receiving stations. The doppler frequency is obtained by comparing the receiving transponder signal with a reference signal which is transmitted from the transmitter station to each receiver station. The resulting doppler frequencies are transmitted to a central station for tape recording.

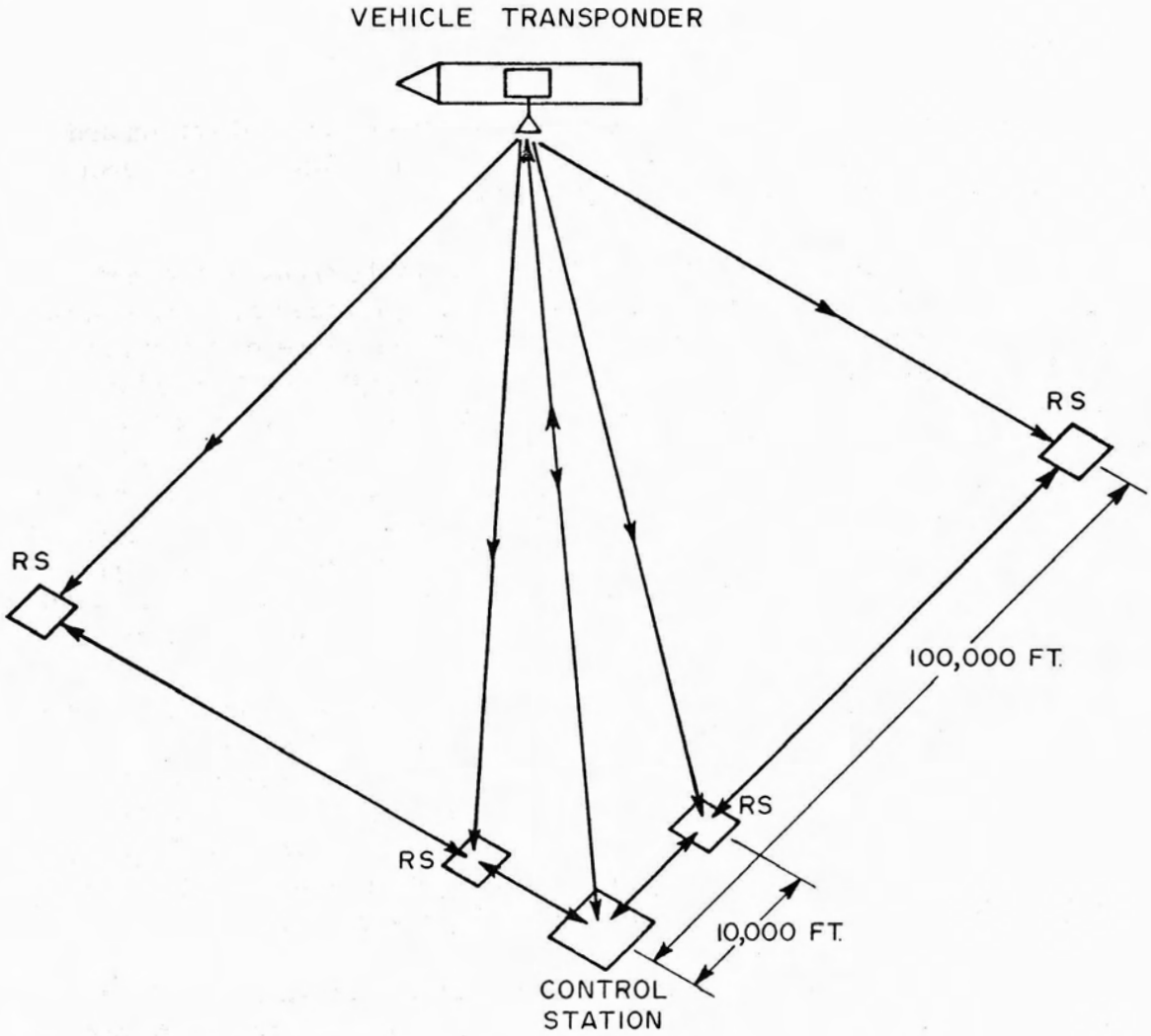

RS: REMOTE STATIONS

FIGURE 16 MISTRAM GROUND STATION CONFIGURATION

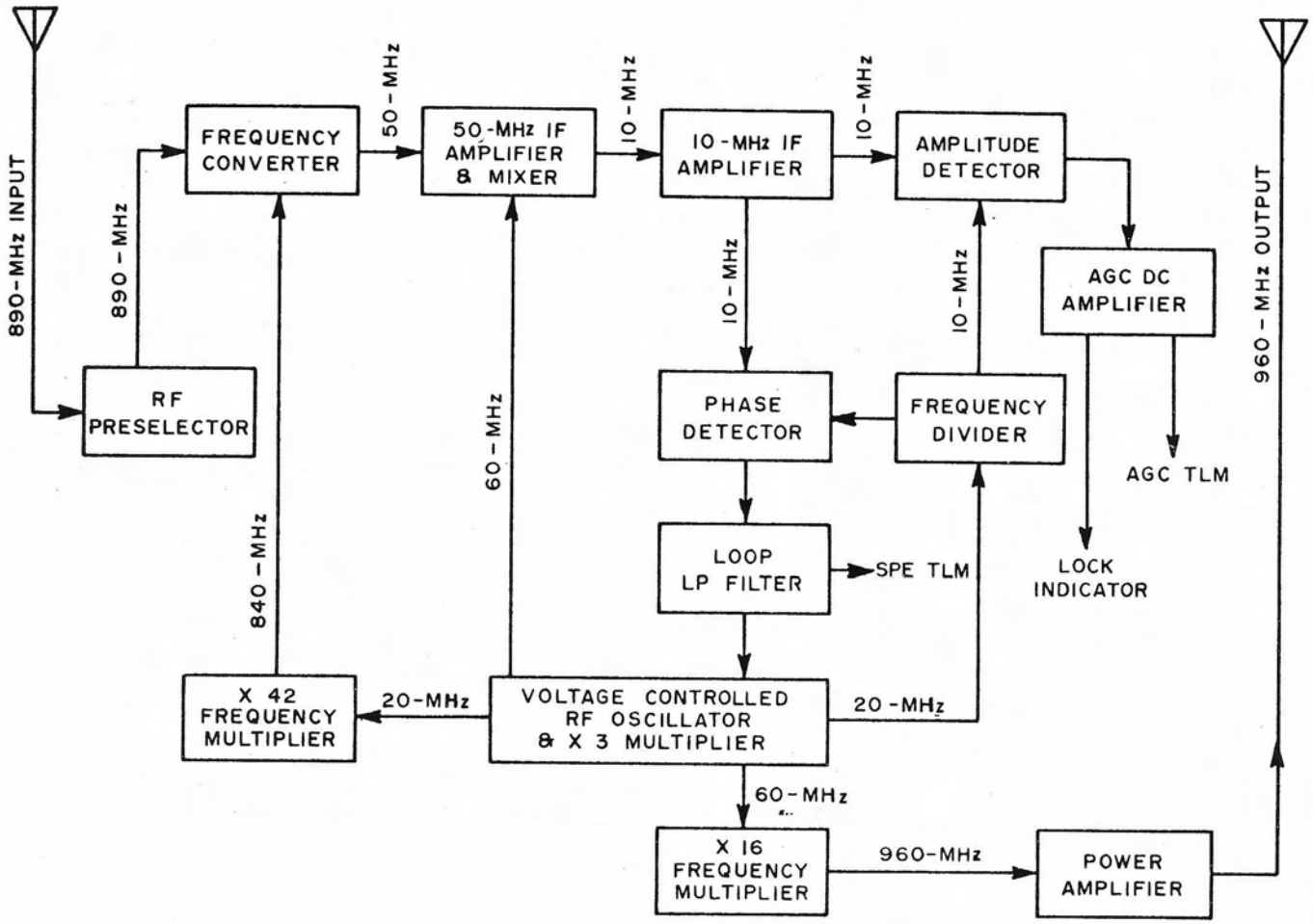

FIGURE 17 ODOP TRANSPONDER BLOCK DIAGRAM

Integration of the doppler frequency by cycle counting (that is, integration of the radial velocity of the vehicle) for each receiving station yields the distance transmitter-transponder-receiver. From these range sum data the position of the vehicle is computed. ODOP data are not available in real time.

AZUSA. AZUSA is an interferometer tracking system with tracking stations located at Cape Kennedy and on Grand Bahama Island. These two tracking stations cover only a part of the vehicle flight path.

The AZUSA ground station transmits to the vehicle a C-band carrier, which is modulated with several low frequencies for ranging. The vehicle-located transponder retransmits the ranging modulation phase-coherent with the received modulation signals on a carrier offset by 60 MHz and phase-coherent with the received C-band carrier. A common antenna is used on the vehicle for transmitting and receiving. A block diagram of the transponder is shown in Figure 18. The AZUSA vehicle-located transponder is compatible with the planned GLOTRAC tracking network which provides a global tracking capability.

The position of the vehicle is determined by measuring range and two angles (direction cosines) at the ground station. The ground station consists of two crossed baselines with several antennas along each baseline (Fig. 19). Range measurement is accomplished by measuring the phase delay between the received and transmitted carrier frequencies at the ground station. The phase delay of the modulation frequencies is used to resolve the ambiguity in the range measurement. Since the path lengths from the transponder to each of the receiving antennas differ, the transponder reply signals arrive at separate antennas slightly out of phase. The phase difference between signals received at spaced antennas along one baseline yields the direction cosine of the line-of-sight to the vehicle with respect to this baseline. In the AZUSA ground station, two direction cosines, one for each baseline, are measured. Several antennas with different spacing supply fine and coarse direction cosine data for ambiguity resolution. From range and two direction cosines, the position of the vehicle is computed. The AZUSA system provides tracking data in real time.

Radar Altimeter. The radar altimeter provides altitude data to supplement ground station tracking data when the vehicle is not covered by land-based tracking stations.

The altimeter transmits 144 1-microsecond RF pulses per second at a frequency of 1610 MHz and measures the pulse travel time from the vehicle to the ocean surface and return. The measured time interval is digitally encoded and the data are telemetered to a ground station, or recorded on tape for

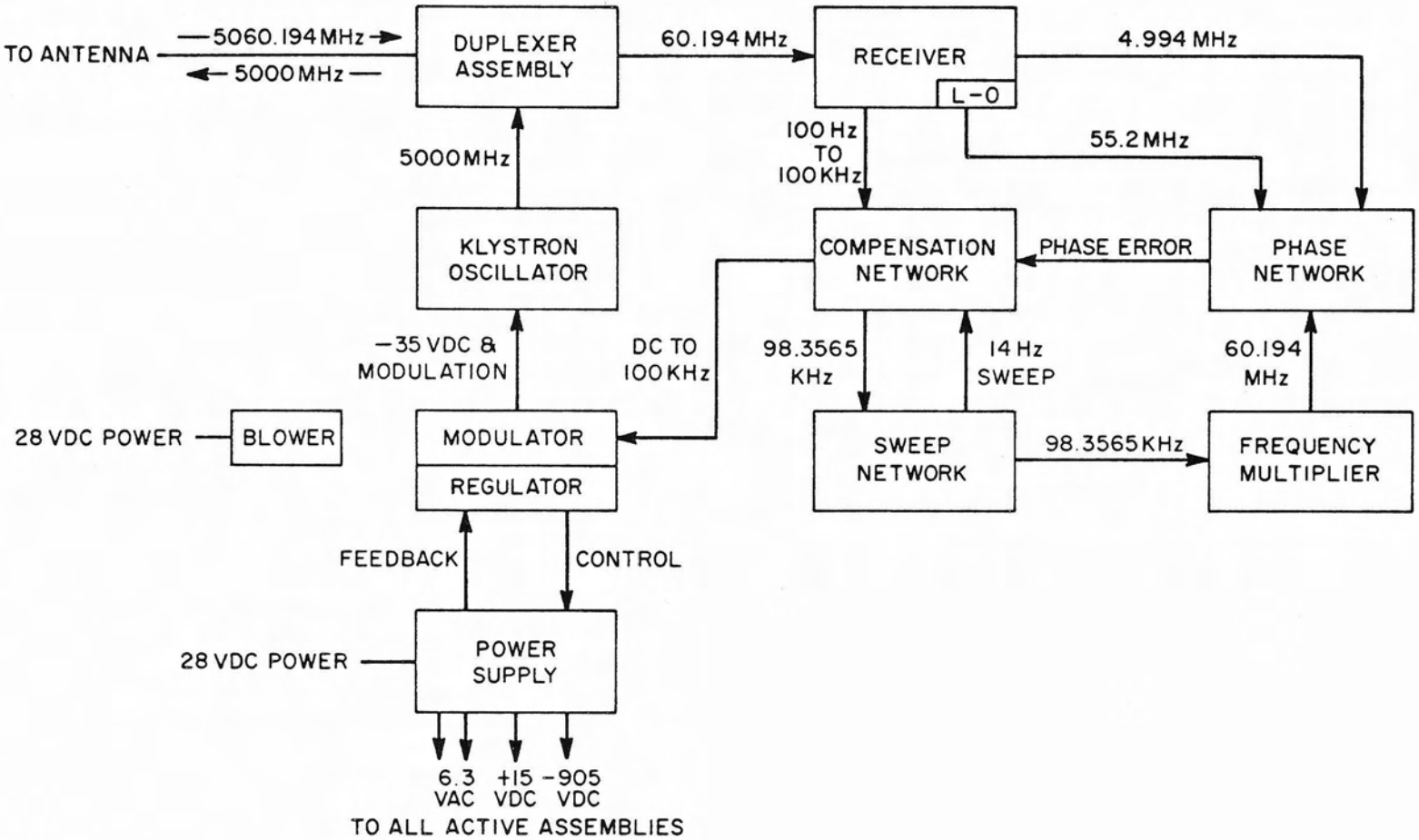

FIGURE 18 AZUSA TRANSPONDER BLOCK DIAGRAM

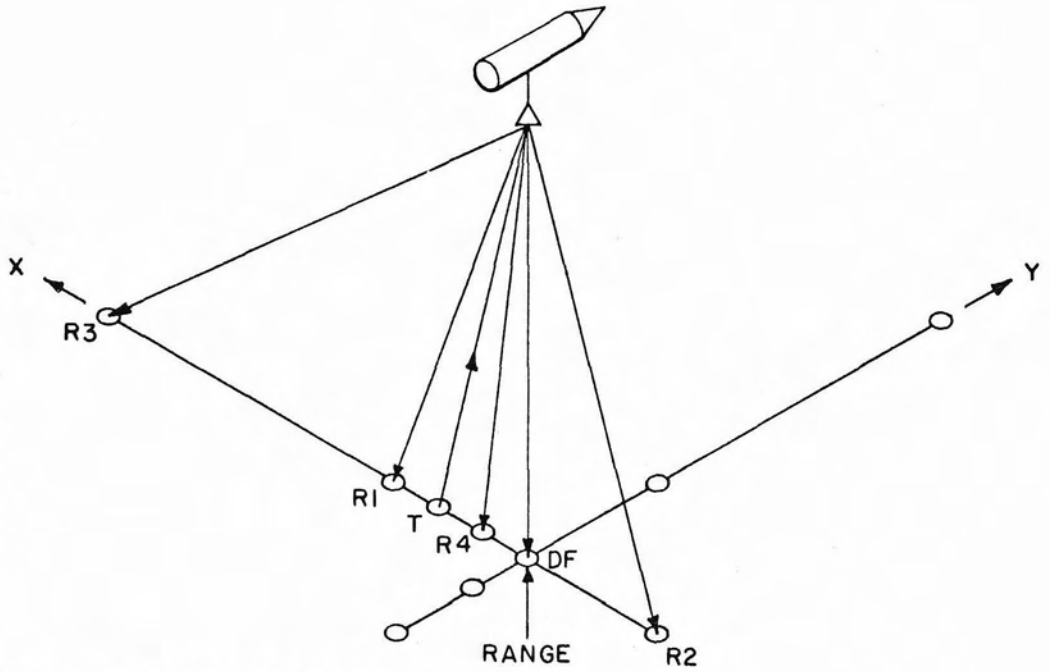

NOTE: ONE BASELINE SHOWN
FOR CLARITY ONLY.

MEASUREMENTS

R1 - R2 : FINE COSINE X
R2 - R3 : RATE COSINE X
DF - R4 : INTERMEDIATE COSINE X
SIMILAR FOR Y-BASELINE

T : TRANSMITTER ANTENNA
DF: DIRECTION FINDER, RECEIVING
R1 : RECEIVING ANTENNA
R2 : RECEIVING ANTENNA
R3 : RECEIVING ANTENNA
R4 : RECEIVING ANTENNA

FIGURE 19 AZUSA ANTENNA BASELINES

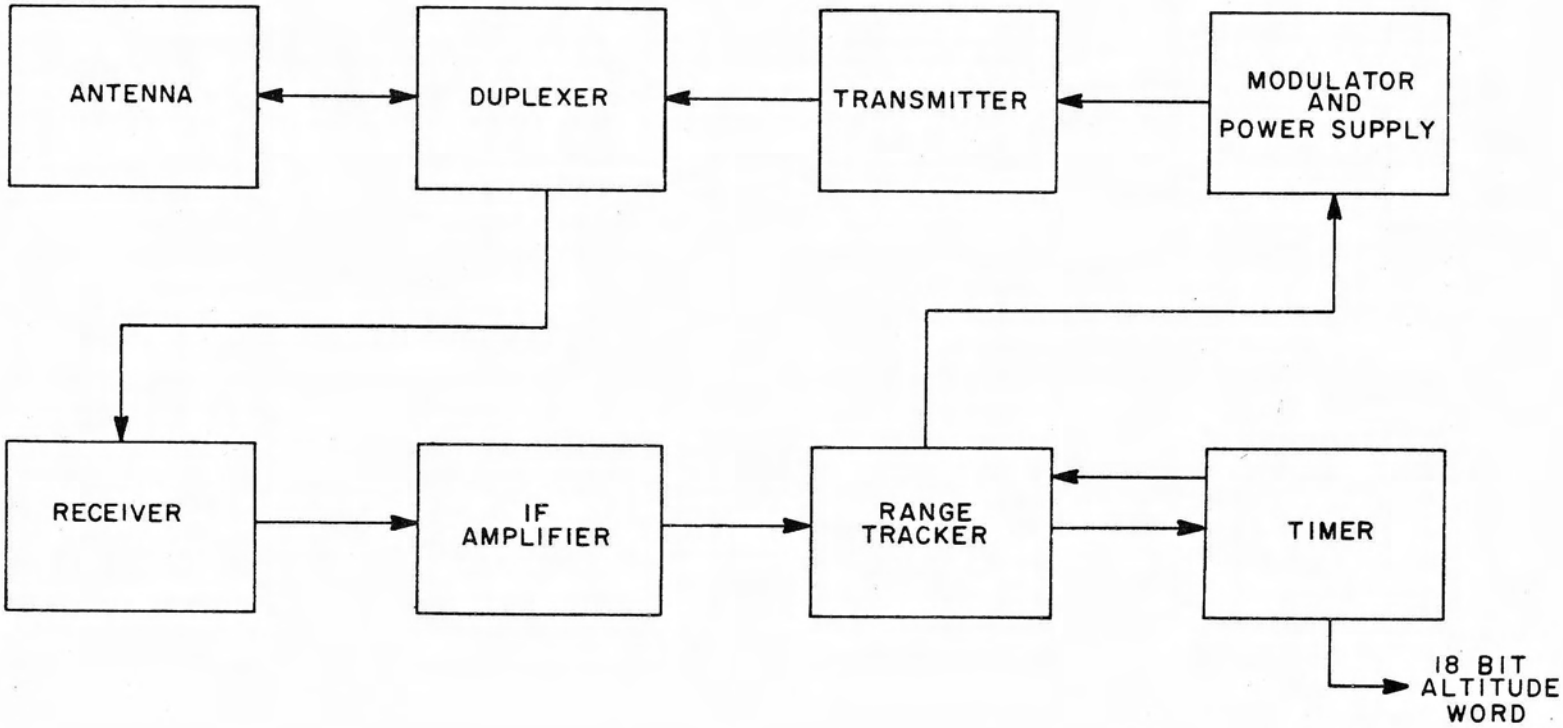

FIGURE 20 RADAR ALTIMETER BLOCK DIAGRAM

playback as the vehicle passes over a ground station. A block diagram of the altimeter is shown in Figure 20. The altitude data are encoded into an 18-bit word and transmitted at the rate of 36 words per second.

Airborne range and orbit determination system (AROD). The AROD tracking system, in development under supervision of Marshall Space Flight Center, is available for Saturn V launch vehicles. The AROD tracking system may be called an inverted system because the transmitter and receiver are located on the vehicle and the transponder is located in the ground station.

The system simultaneously measures range and range rate from the vehicle to a minimum of three ground station transponders (Fig. 21). The measurements are made in the launch vehicle. Position and velocity of the vehicle, with respect to these ground stations, are computed from the measured range and range rate data. The vehicle transmitter radiates a CW signal to the ground station located transponder which offsets the received frequency and transmits the signal back to the vehicle. Thus, the signals from different ground stations received by the vehicle are separated in frequency. The range measurements are achieved by measuring phase delay between transmitted and received signals. The transmitted signal consists of two frequencies with a frequency difference of approximately 3 MHz, which is used for fine range resolution. The lower of the two frequencies is phase-modulated for range ambiguity resolution. The velocity of the vehicle is determined from the doppler frequency shift in the received signal.

For position computation, simultaneous measurements to at least three ground stations are necessary. To improve system performance during station switch-over, the system is designed to track four ground stations simultaneously. The fourth tracking link also increases the reliability by providing redundant data. Continuous tracking of the Saturn vehicle powered flight requires the use of oceanborne AROD transponder stations.

A VHF command link is used to turn the ground stations on and off as the vehicle passes. This link is active only during short periods. Each station transmits an identification code over the tracking link to the vehicle. Station identification is necessary to select the proper set of station coordinates stored in the vehicle computer for position and velocity computation.

The vehicle-located AROD equipment diagram is shown in Figure 22 and the characteristics are given in Figure 23. The equipment includes a four-channel receiver with measuring subsystems for range and range rate, a tracking transmitter, and a VHF command transmitter with station logic encoder.

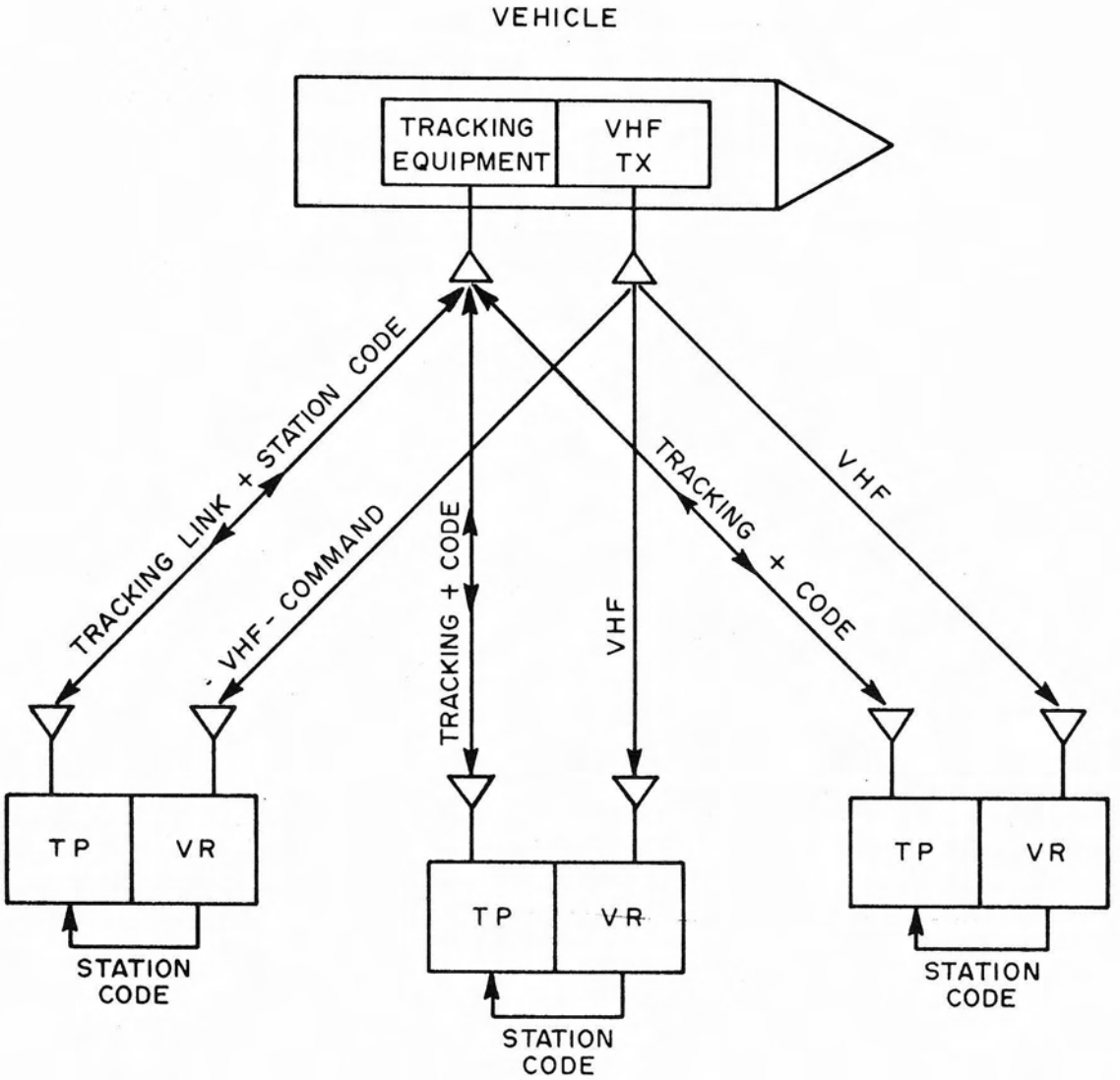

TP: TRACKING TRANSPONDER
VR: VHF RECEIVER

FIGURE 21 AROD SYSTEM CONFIGURATION

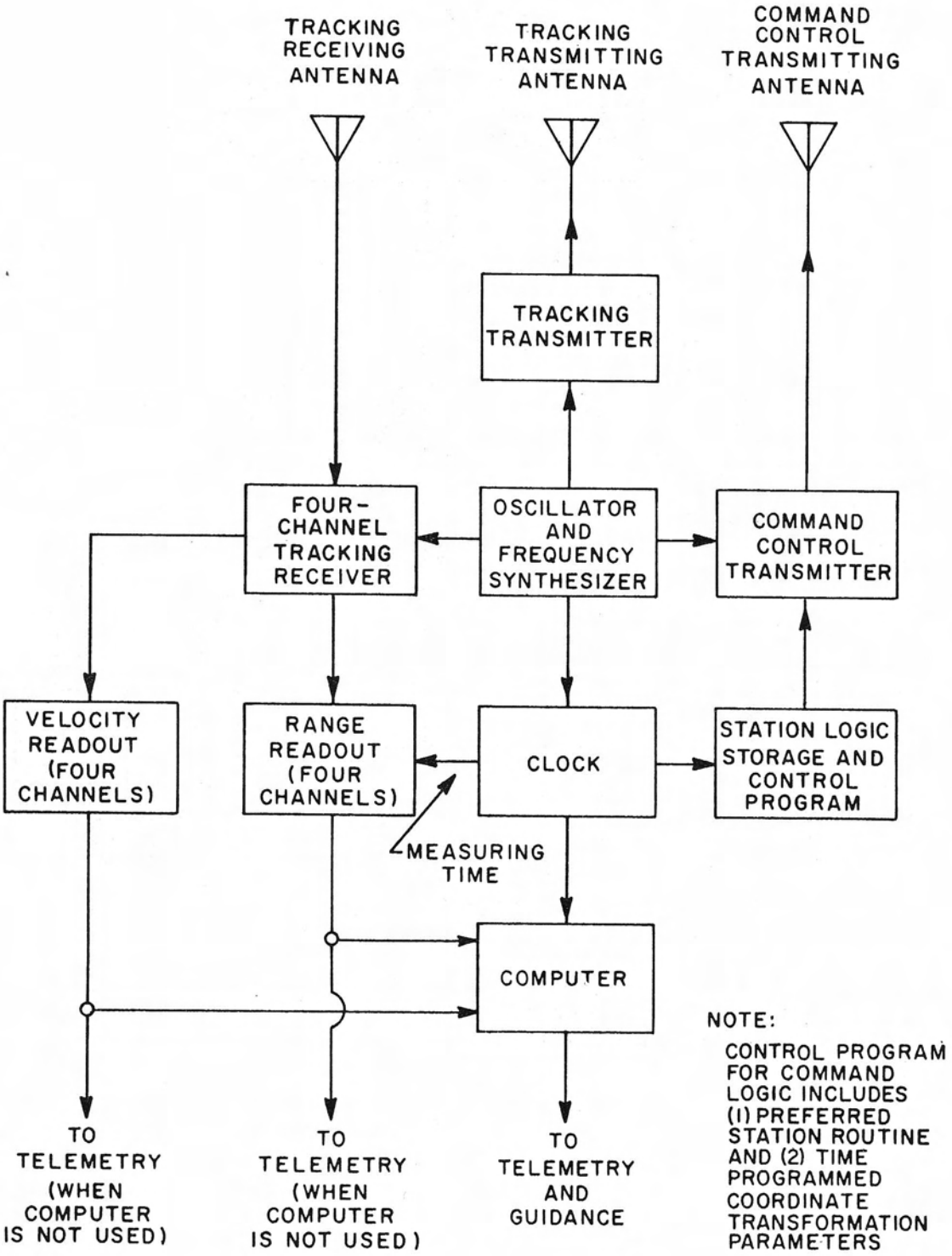

FIGURE 22 AROD ONBOARD EQUIPMENT

FIGURE 23 CHARACTERISTICS OF THE AROD SYSTEM

Vehicle Equipment:	
Transmitter Frequency - - - - - - - - -	2100 MHz (approx)
Power Output - - - - - - - - - - - - - -	5 watts
Ground Station:	
Transponder Frequency - - - - - - - -	2200 MHz (approx)
Power Output - - - - - - - - - - - - - -	50 watts
Expected Accuracies:	
Range - - - - - - - - - - - - - - - - - -	3.3 m (10 ft)
Velocity - - - - - - - - - - - - - - - -	0.06 m/sec (0.2 ft/sec)

The AROD ground station equipment (Fig. 24) is composed of a tracking transponder, a VHF command receiver with decoder, and an antenna system. The AROD ground stations are very simple and inexpensive (as compared to a typical ground tracking station). They may be unattended and no communication between stations is required.

The digital data output of the AROD measuring system consists of four phase-delay measurements from which ranges are computed, four cycle counts of doppler frequencies, four station identifications, and time. These data are transmitted to ground tracking stations by telemetry for trajectory computation or fed to the vehicle guidance computer for navigation. The AROD system could be used as backup for the inertial measuring system by supplying position and velocity data.

MINITRACK. Each orbiting space vehicle must carry a MINITRACK beacon to allow tracking during its orbital life. The tracking is accomplished with the existing MINITRACK network, which was originally established for the Vanguard program.

The characteristics of the MINITRACK beacon used in the launch vehicle are given in Figure 25. The beacon is a self-contained transmitter radiating a CW signal which may be modulated for telemetry.

MINITRACK is an interferometer system with crossed baselines similar to the AZUSA system. The MINITRACK ground station measures only two direction cosines as a function of time, and only the angular position of the vehicle with respect to the baselines is determined as the vehicle passes over the station. The orbit of the vehicle is computed from a series of independent angle measurements at various ground stations.

The direction cosines are computed from phase-difference measurements at separated antennas. Several antenna pairs are used along each baseline to obtain fine, medium, and coarse angle measurements. The MINITRACK ground station has a space-fixed antenna pattern.

Command Systems

Range safety command system (tone system). The primary purpose of the range safety command system is to provide a positive means of terminating the vehicle flight upon command from the ground. The AN/DRW-13 command set is used to meet the safety requirements in early launch vehicle flights. According to range safety requirements, each powered stage contains two UHF radio

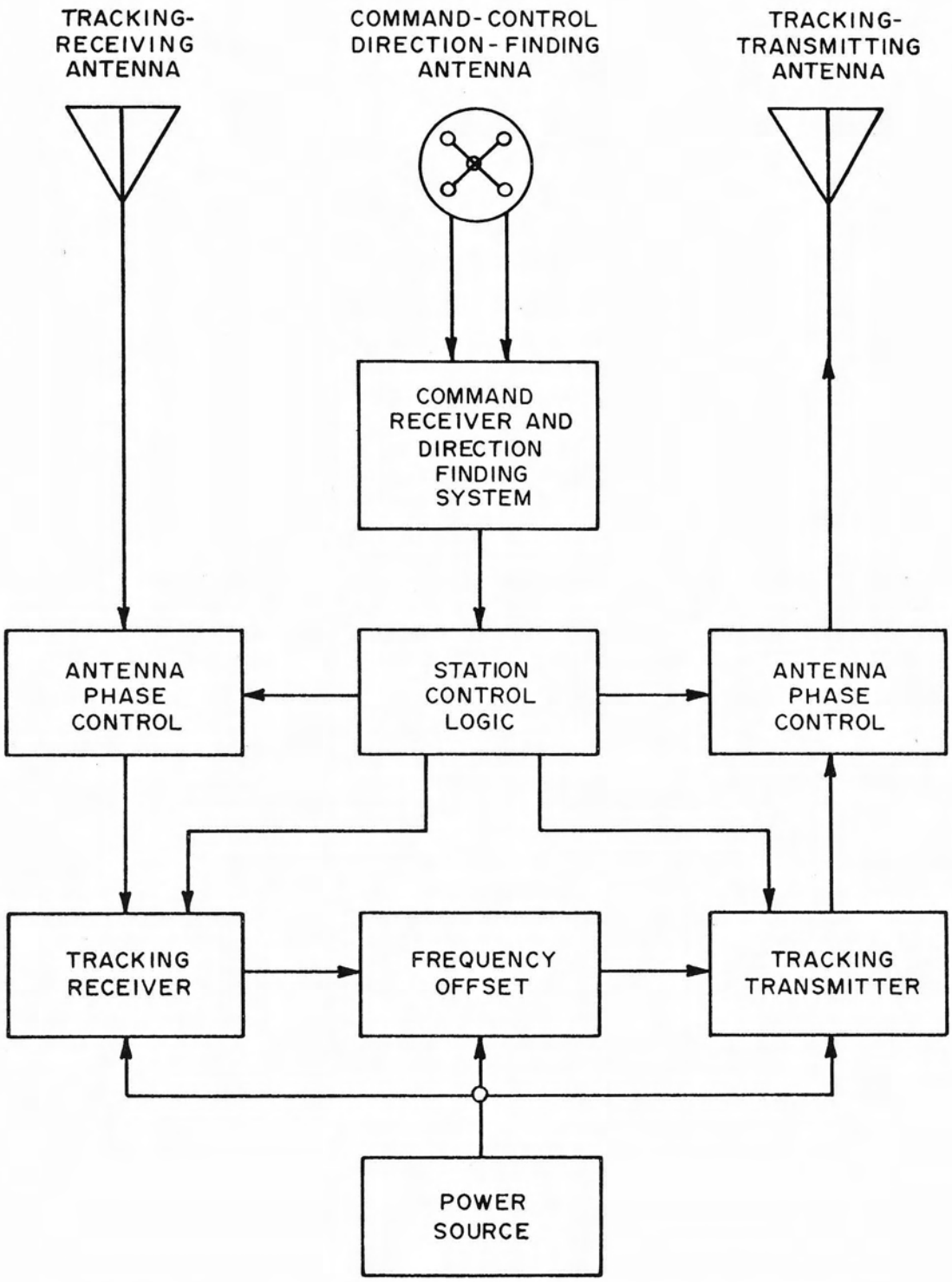

FIGURE 24 AROD TRANSPONDER GROUND STATION

FIGURE 25 MINITRACK BEACON

Transmitter Power - - - - - - - - - - - - -	20 mw
Frequency - - - - - - - - - - - - - - - - - -	139.995 MHz
Weight -	1.12k (2.5 lb)
Volume -	21.1 cm^3 (345.6 cu in.)
Life -	50 days
Range (with MINITRACK Station) - - - - - -	1000 miles

receivers which are compatible with the dual FRW-2 command transmitters located at range ground stations.

The AN-DRW-13 command set consists of a UHF receiver and a 10 channel audio decoder. Figure 26 shows a block diagram of the range safety command system. The propellant dispersion command and other mission commands are transmitted by frequency modulating the FRW-2 command transmitter (at the launch site) with selected combinations of audio tones. The command receiver demodulates the received signal. The recovered audio tones are then applied to the decoder and separated according to frequency to energize the proper combination of relays, which completes the circuitry for execution of the desired command.

Range safety command system (digital). A digital command system replaces the AN/DRW-13 audio system in later launch vehicle flights. The onboard equipment consists of an FM receiver and a digital decoder and is standard for all vehicles. A precoded plug-in device is used to assign a certain address code for each vehicle. When a message is received and injected into the decoder, the address is compared with the address code assigned to that vehicle. If the address is correct, the command which corresponds to the address is executed through the closure of relay contacts.

A digital encoder-exciter unit in combination with the FRW-2 transmitter produces a frequency-shift keyed carrier modulated with digital information. A plug-in device is used in the encoder to transmit the preassigned address for each vehicle.

IU command system. The Saturn V IU system is active during powered and orbital phases of flight. The principal functions of the system are as follows:

1. To initiate closed-loop tests in the vehicle, the IU command message instructs the digital computer as to which test program is to be initiated

2. To provide ground computer orbital data to the digital computer

3. To use in an emergency situation

Ground stations. Existing Gemini ground stations are used for the Saturn V IU command system. The modulation scheme is frequency-shift keyed/frequency modulation (FSK/FM).

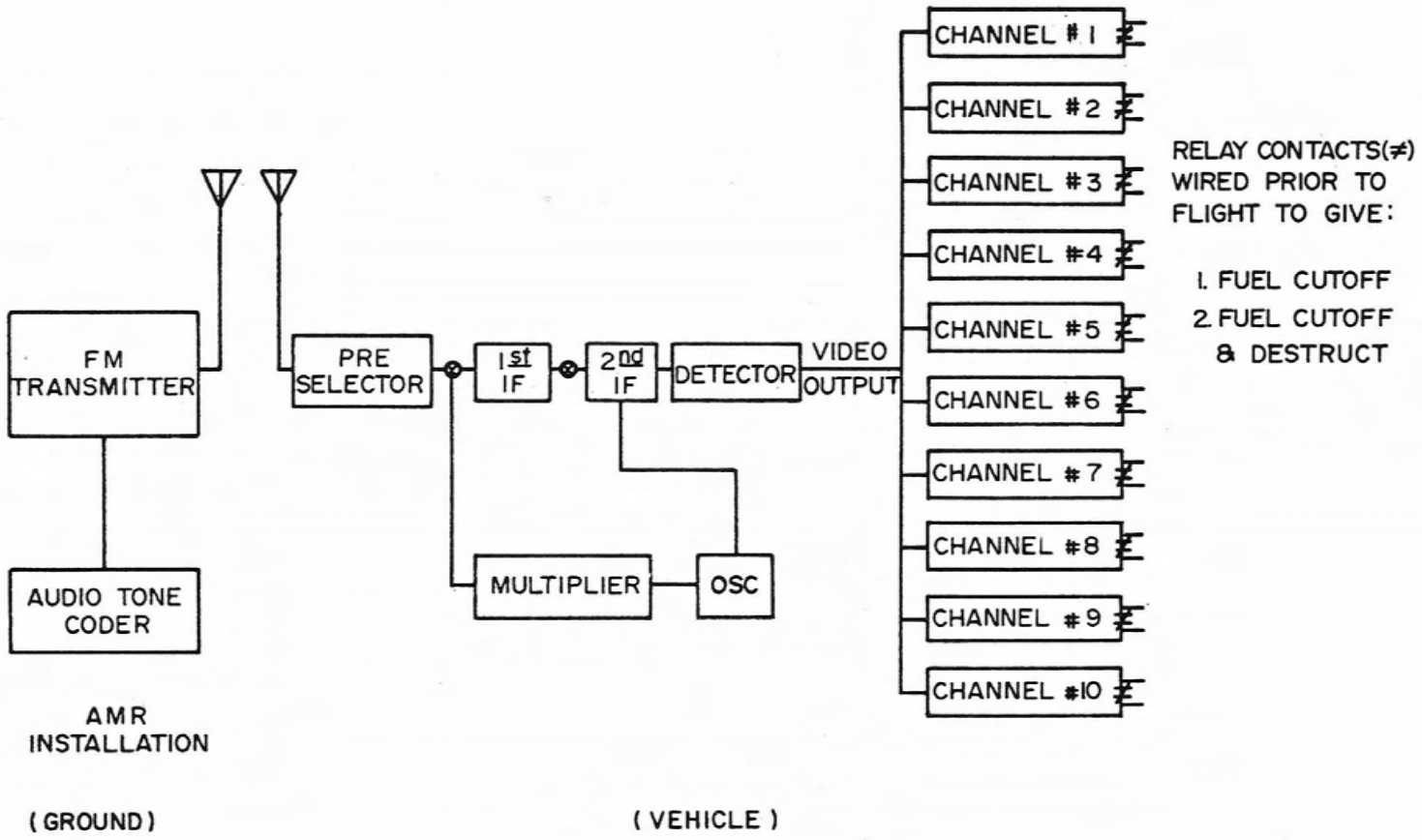

FIGURE 26 RANGE SAFETY COMMAND SYSTEM

The information rate from the IU command ground station to the IU command receiver-decoder is 1000 sub-bits per second. Since five sub-bits represent one data bit, the data bit rate is 200 bits per second.

The transmitted message is verified by simultaneously comparing, bit-by-bit, the message shown by a ground station receiver with the message obtained from the main ground station storage.

Onboard operation. Figure 27 illustrates the data flow for the onboard system. The IU command system receives and decodes the FSK/FM signal transmitted from the IU command ground station. Each data bit of the received message is coded by a 5-bit pattern. A sub-bit decoder in the IU command system recognizes deviations in the 5-bit pattern as errors. If the accumulated errors exceed an allowable number, the message is rejected; if the allowable number is not exceeded, the message is processed by the digital decoder, which performs the following functions:

1. Verifies address

2. Performs logical combinations of the address verification and control bits which allow information transfer to the data adapter

3. Provides outputs to telemetry indicating when, and if, the functions of 1 and 2 have occurred.

Upon receipt of a correct message, the data or command portion of the message is sent to the digital computer through the data adapter. The data are then put into storage or the command is executed. If a message contains data for switch selector operation, it first goes to the digital computer as previously described. After processing by the digital computer, appropriate data are given to the switch selectors.

Great care is taken to insure that only the intended commands and messages are executed. The methods are as follows:

1. The proper address code for the particular vehicle must be received.

2. Signals from the decoder are telemetered to the ground. If the telemetry indicates that decoding has occurred, the next message is transmitted. If not, the message is repeated.

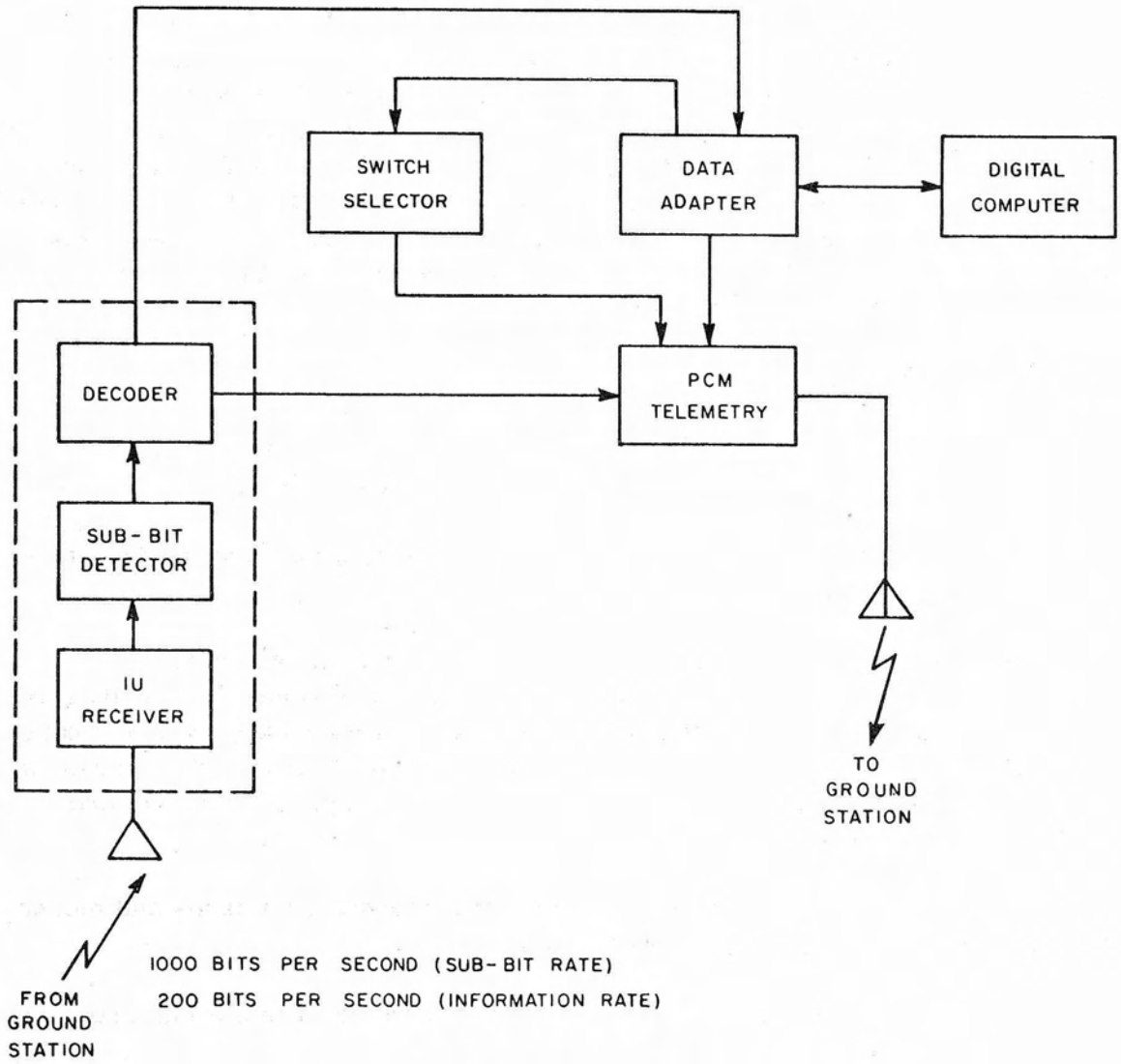

FIGURE 27 SATURN V ONBOARD IU COMMAND SYSTEM DATA FLOW

3. The complete message is telemetered from the data adapter; after verification on the ground, an "execute" command is then sent.

The chart in Figure 28 shows the usage planned for the RF systems discussed in this section on the early research and development launches of the Saturn V vehicle.

OPTICAL INSTRUMENTATION

In aircraft testing, pilots and observers in the craft have the advantage of being able to see and report performance characteristics. Thus they are able to replace much of the instrumentation. Stated another way, they can see and report unanticipated events which would require a large amount of instrumentation if complete coverage were desired. Perhaps more important is the fact that certain phenomena are subject only to qualitative evaluation and interpretation. In such cases, only visual observation will satisfy the need of a designer for information.

To a certain extent, long range telescopic cameras provide some of the desired coverage. Frequently however, the events or phenomena occur beyond the range of these cameras, or are internal to the vehicle. In the Saturn V vehicle, on-board optical instrumentation is provided to meet these requirements. Both television and film cameras are used.

Television systems. The Saturn V launch vehicle television system is used to provide both real-time and permanent visual data on the performance of certain vehicle functions.

A block diagram of the vehicle and ground equipment is shown in Figure 29. Figure 30 lists the television characteristics. Up to four cameras may be used with a single sequence switcher to make observations at different locations in the vehicle. The sequence switcher selects the output of one to four cameras. A separate programer is used to change the rate of switching or the number of cameras being switched. The camera control unit provides all scanning signals to the camera and also provides video amplification from the camera. The cameras may be placed up to 30 meters away from the control unit. The cameras have a maximum outside diameter of 7 centimeters and a length (excluding the lens system) of 35 centimeters. From 1 to 7 cameras, with control units, are used with a single transmitter. Television signals are transmitted to ground stations by frequency modulation. A configuration of the airborne equipment is shown in Figure 31.

FIGURE 28 SATURN V RF SYSTEMS

FUNCTION	SYSTEM	S-IC STAGE	S-II STAGE	S-IVB STAGE	INSTRUMENT UNIT
Tracking	C-Band Radar Transponder				x
	MISTRAM		x		
	AZUSA				x
	ODOP	x			
	AROD				x
	Radar Altimeter				x
	MINITRACK				x
Command	Range AN/DRW-13	x	x	x	
	Safety Digital	x	x	x	
	Guidance Command				x

NOTE: The AN/DRW-13 range safety command will be used on initial Saturn V models and will be followed by the digital range safety command.

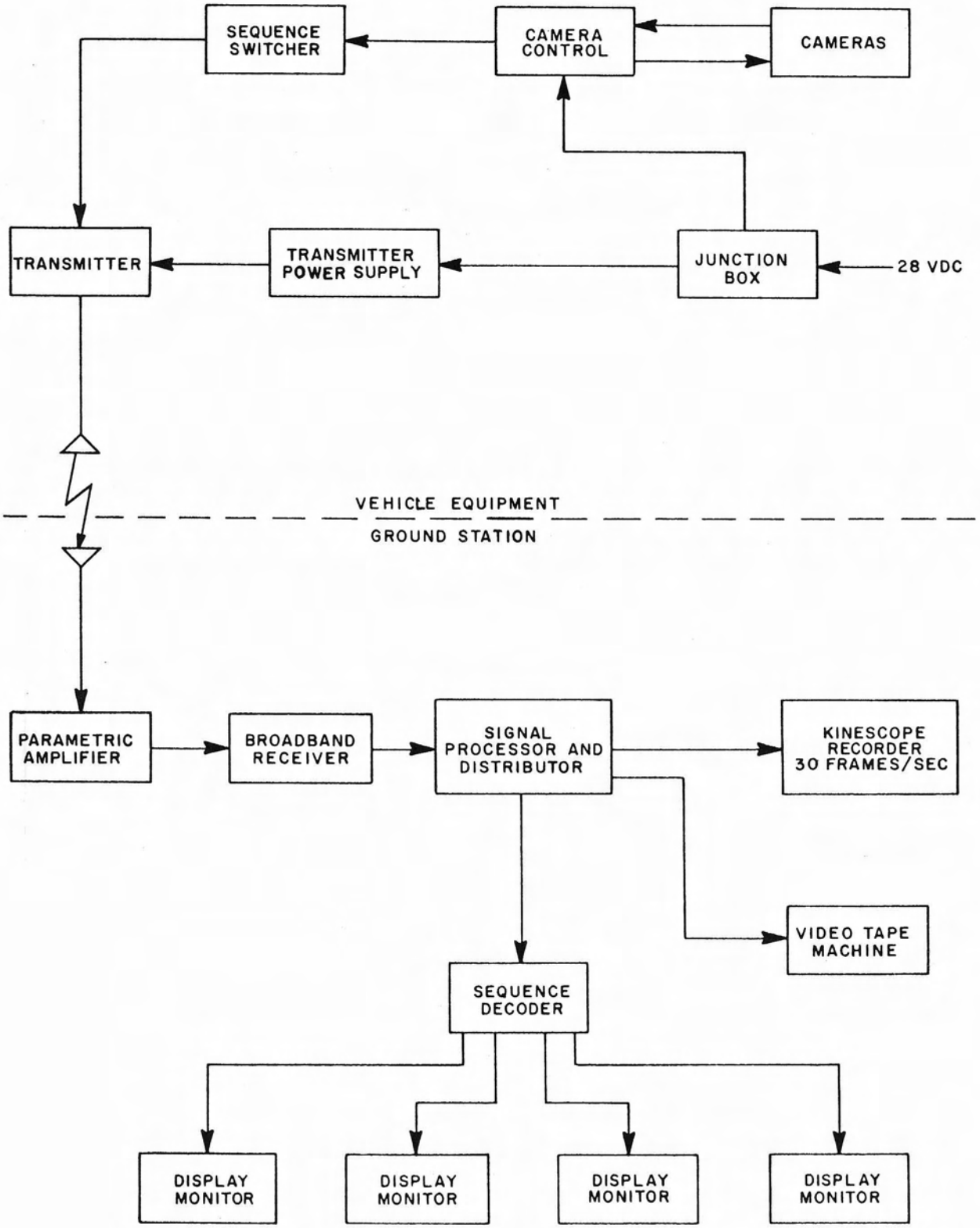

FIGURE 29 SATURN TELEVISION SYSTEM

FIGURE 30 SATURN V LAUNCH VEHICLE TELEVISION CHARACTERISTICS

Transmitter:	
Video Bandwidth	8 MHz
Modulation	FM
Deviation	16 MHz (for composite video)
Output Power	2.5 watts min.
Unmodulated Frequency	1700 MHz ± 0.20%
Video Resolution (horizontal) of Received Picture	600 lines
Closed Circuit Camera System:	
Camera Light Sensitivity	1.0 foot candle
Video Bandwidth	8 MHz
Frame Rate	30 per second
Scanning	2:1 interlance
Specifications of Television Ground Station for Support of Saturn Television System:	
Parametric Amplifier:	
Gain	20 db
Noise Figure	1.35 db
Frequency Range	1700 to 1720 MHz

FIGURE 30 SATURN V LAUNCH VEHICLE TELEVISION CHARACTERISTICS (Continued)

Receiver:	
Frequency Range	1700 to 1720 MHz
Gain	90 db
Noise Figures	12 db
Signal Processing and Distributing Amplifier:	
Video Bandwidth	8 MHz
Number of Outputs	4
Sequence Decoder:	
Video Bandwidth each Output	8 MHz
Number of Outputs Selectable	1 to 16
Switching Time	0.1 usec
Video Tape Recorder:	
Video Bandwidth	5.5 MHz
Tape Speed	15 inches per second
Recording Time	96 minutes
Kinescope Recorder:	
Camera Frame Rate	30 per second
Kine-monitor Tube	White face, type P-4 phosphor
Film Capacity	1200 ft
Viewing Monitor:	
Video Bandwidth	8 MHz
Video Resolution (horizontal)	600 lines

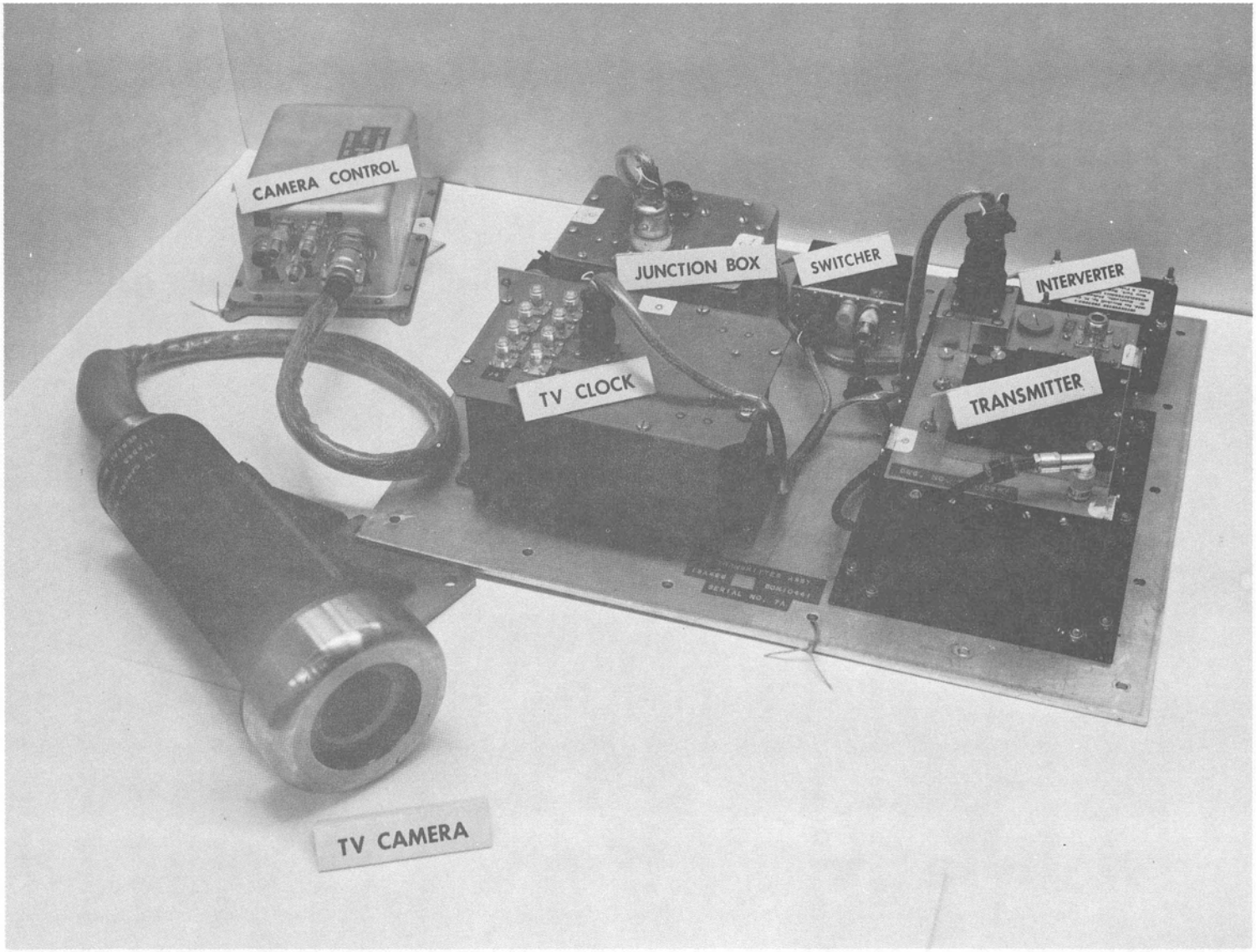

FIGURE 31. SATURN I TELEVISION COMPONENTS

A frequency modulated signal from the vehicle to the ground station receiver is decoded into separate signals representing the number of onboard cameras in use. A storage tube with continued readout is used for each camera channel to provide continuous viewing or conventional monitoring.

The received signal is also recorded on video tape for post-flight analysis. The tape has frame code numbering; when used with the storage tube, the system provides automatic selection and storage of any one frame of any camera.

In addition to the video tape recording, a kinescope recorder is used to make a 16-millimeter film recording of the intermixed camera signal transmission. The camera photographs one picture for each picture from each TV camera (30 pictures per second). These pictures are used to make single-frame enlargements for study purposes.

The ground monitoring and recording station consists of the following:

1. Parametric amplifier
2. Wide-band superheterodyne receiver
3. Signal processing and distributing
4. Sequence decoder
5. A continuous readout storage tube
6. Video tape recorder
7. Kinescope recorder
8. Storage tube for automatic frame selection from any camera.

Film cameras. An ejectable, recoverable film camera capsule has been developed for the Saturn program. Two models are currently in use. One is for direct viewing; the other is designed to be used with fiber optics for viewing inaccessible areas. A cutaway view of the capsule is shown in Figure 32.

The forward section contains a 16 millimeter D. B. Milliken model DBM-3A RFI camera with 30 meters film capacity. It is located behind a 19 mm thick, fused silica window. Normally, vehicle primary power is used to drive the camera, but batteries can be included in the camera compartment for special

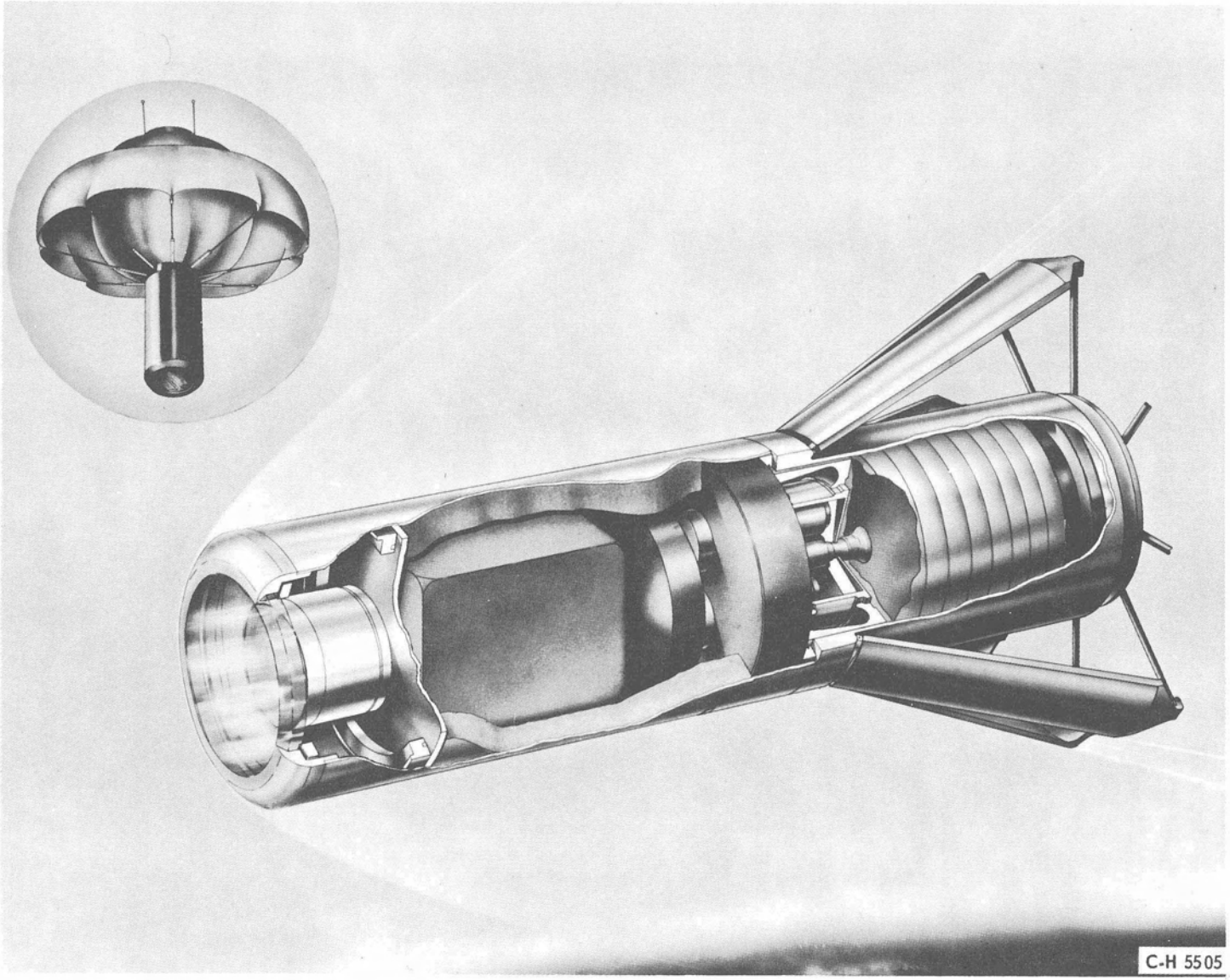

FIGURE 32 SATURN V CAMERA CAPSULE

cases. A variety of lenses, shutters, and frame rates can be accommodated. The maximum frame rate with this camera is 500 frames per second.

The rear section of the capsule contains all recovery equipment. Drag flaps open at ejection and stabilize the capsule during re-entry. The capsule is designed for a re-entry velocity of Mach 10. After re-entry into the atmosphere, baroswitches initiate the shedding of the flaps, deploy a skirted balloon (paraballoon), and inflate it. Upon water impact, the balloon supports the capsule while a dye marker, a beacon light, and a radio beacon guide recovery teams to the scene. Figure 33 shows a capsule with balloon inflated.

Because the capsule ejection tube must be located near the outside of the vehicle, certain applications require the use of fiber optics. The Saturn I vehicle currently uses 16 millimeter bundles of 2 meters and 4 meters length. Each bundle contains 777,600 individual image-forming glass fibers, yielding resolution superior to commercial television, with excellent color rendition. Figure 34 shows a camera capsule with fiber optics bundle attached.

Interior views of the vehicle require artificial light, and both incandescent and stroboscopic lamps are used; the latter is used to reduce the power drain when high illumination is required.

Figure 35 illustrates the most complex camera system that will be used in the Saturn program. The timer contains a precision clock, driving an electronic circuit which generates a serial code used to optically mark the edge of the film. The clock starts at lift-off.

One camera acts as the master, generating pulses used to trigger the strobe lights. The synchronizer compares the pulse rates of the two cameras and operates to bring the second, or slave, camera into synchronism. The accuracy requirement on the phasing of the two cameras is not severe, since the light pulse is very short compared to the shutter open-time. An optical elbow, or prism, is required in some applications to bend the viewing axis. Other applications may use fiber optics previously mentioned.

The choice of television or film cameras depends on the particular requirements. Each has advantages over the other in certain applications.

Television offers less overall cost than the camera capsule, on all but the simplest installations. It gives data in real time and requires no complex recovery operations. The TV camera is small and can be located in very tight places. It can operate during any phase of the flight, whereas the film cameras are limited to portions which will yield a re-entry velocity of Mach 10 or less.

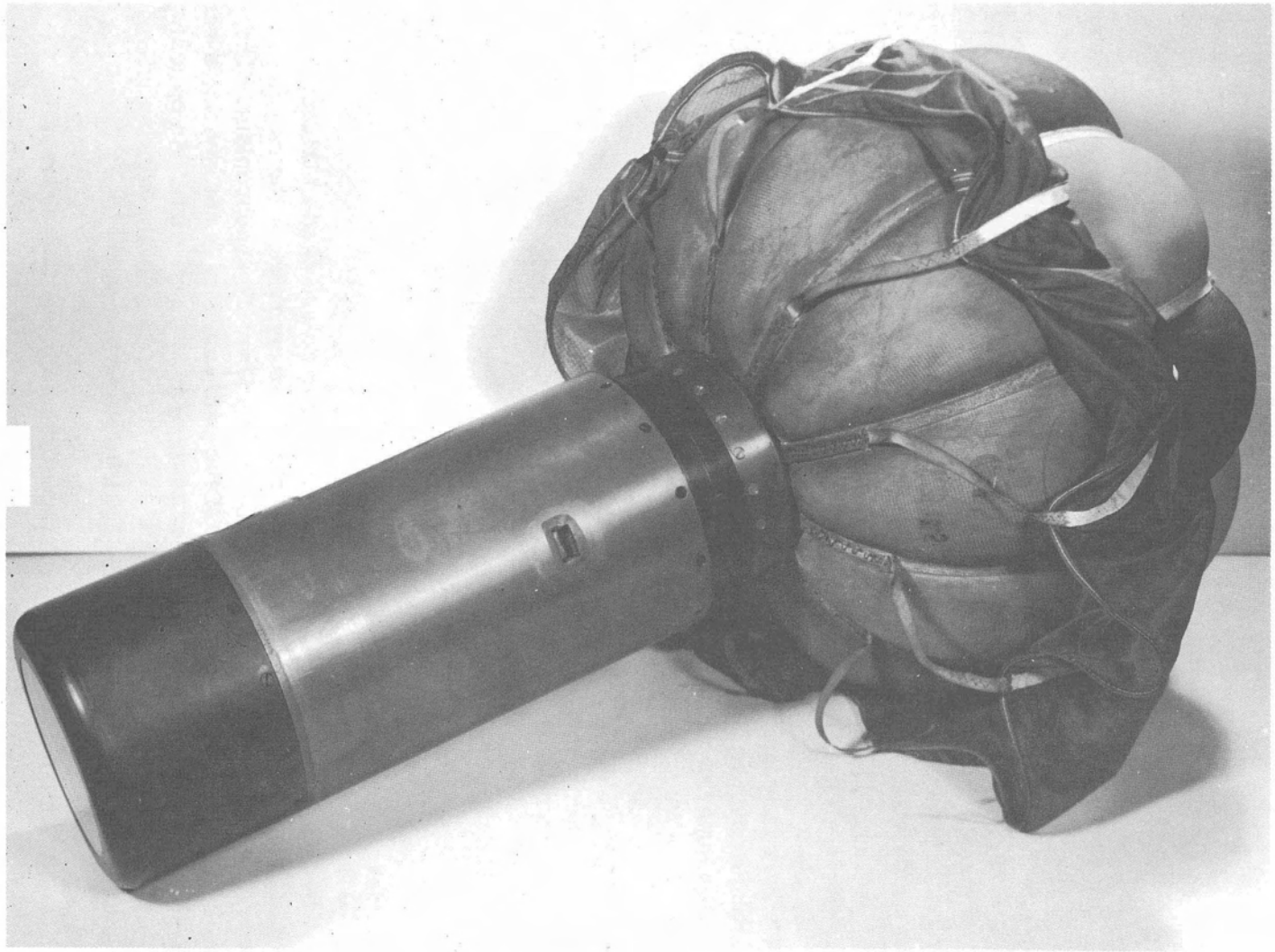

FIGURE 33. CAMERA CAPSULE, BALLOON INFLATED

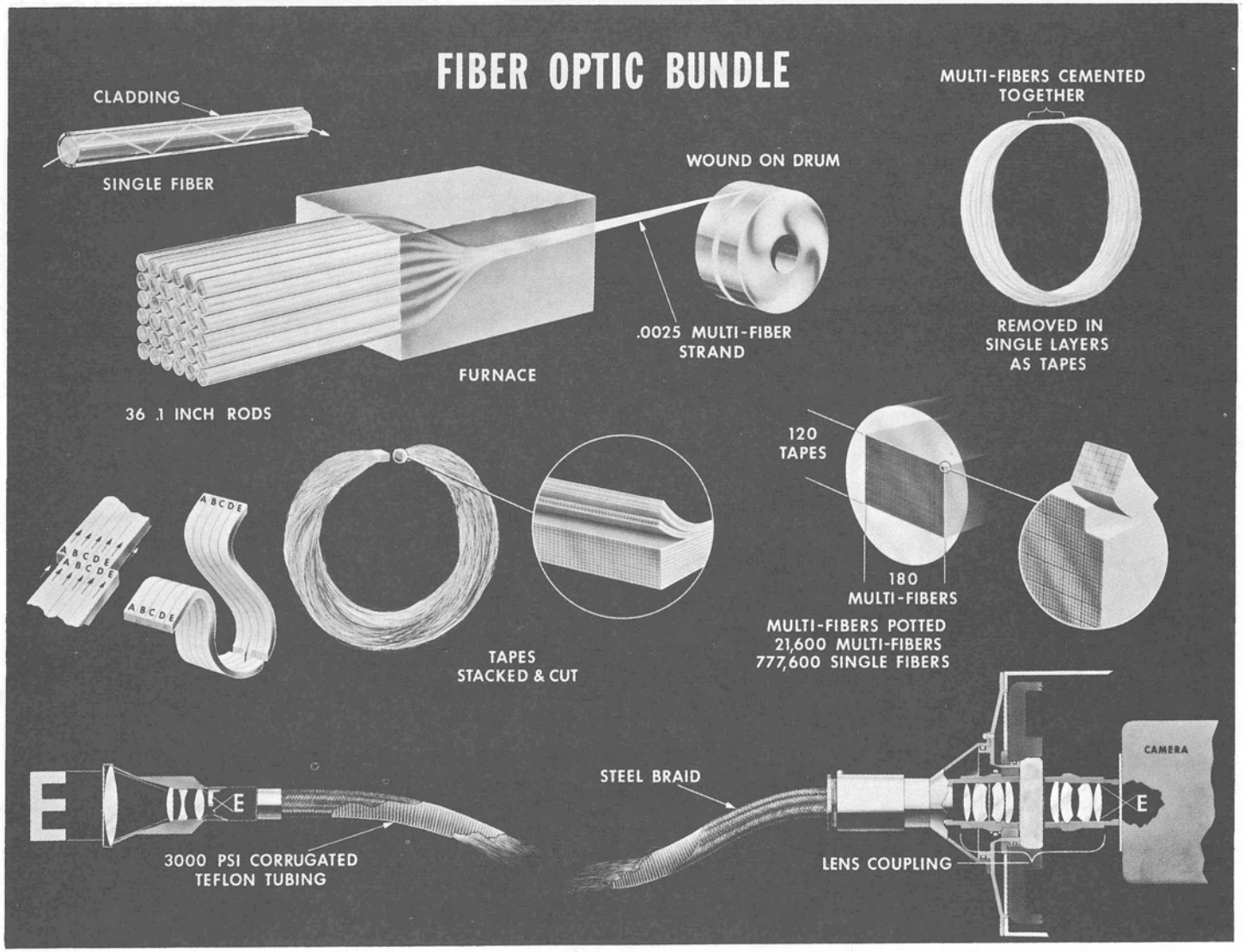

FIGURE 34. CAMERA CAPSULE WITH FIBER OPTICS

BLOCK DIAGRAM
CAMERA SYSTEM

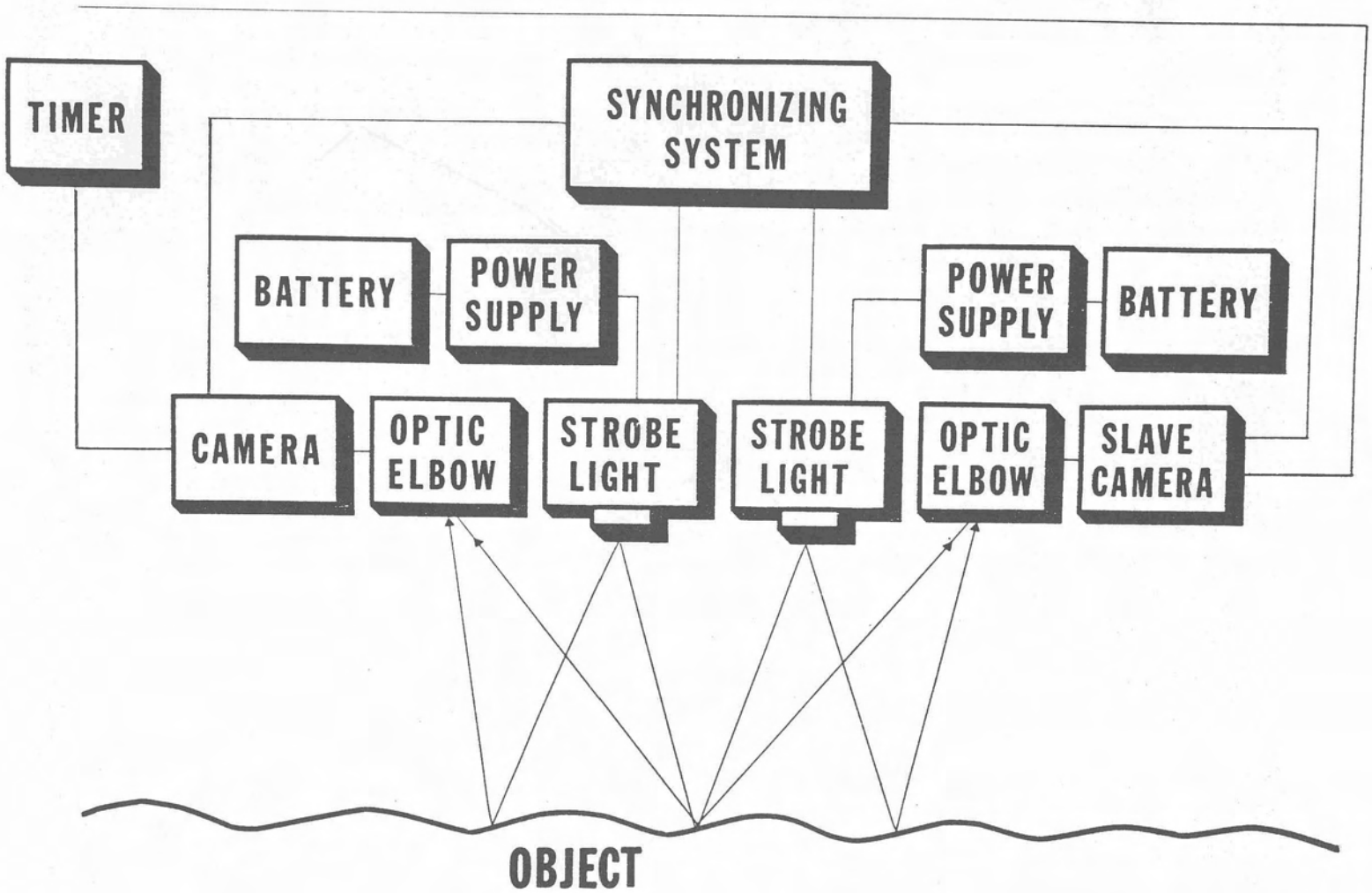

FIGURE 35

Film cameras offer superior resolution and quality. Pictures can be in color, which is often an advantage. They can also be used for very high frame rates (slow motion).

Figure 36 shows the usage of film and TV cameras on the Saturn V vehicle. The most severe technical problem is viewing the interior of the liquid oxygen tank of the S-IC stage.

OPERATIONAL VEHICLES

When manned or "operational" flights begin, the quantity of instrumentation will be reduced. Since the launch vehicle testing will be then essentially complete, only those measurements deemed essential to analyze basic vehicle performance and to monitor failures will be retained. These will include checkout and EDS measurements. Figures 37, 38, 39, and 40 detail the equipment and numbers of measurements for each stage and the IU for the operational Saturn V. Figure 41 shows the complete instrumentation system, along with all other astrionics equipment, for the complete vehicle.

CONCLUSION

What is notable about the Saturn instrumentation system? First of all, the size and complexity are far beyond anything previously attempted in the instrumentation field. The results are technical and management problems which are truly challenging. Some new telemetry techniques have been conceived and reduced to practical, reliable hardware. It is felt that they will influence flight instrumentation practice for years to come. Less spectacular, but significant, advances have been made in transducers and signal conditioning. New tracking systems will yield new orders of accuracy and speed in trajectory and orbit determination. The digital command concept offers new flexibility and reliability essential to orbital operations.

It is the opinion of the author that the most significant advance is the concept of automatic checkout, utilizing the vehicle flight instrumentation system as the heart of the vehicle checkout system.

Automatic checkout, as such, is not new. Numerous weapon systems have used it to some degree; some were very sophisticated. Most, however,

SATURN V OPTICAL SYSTEMS

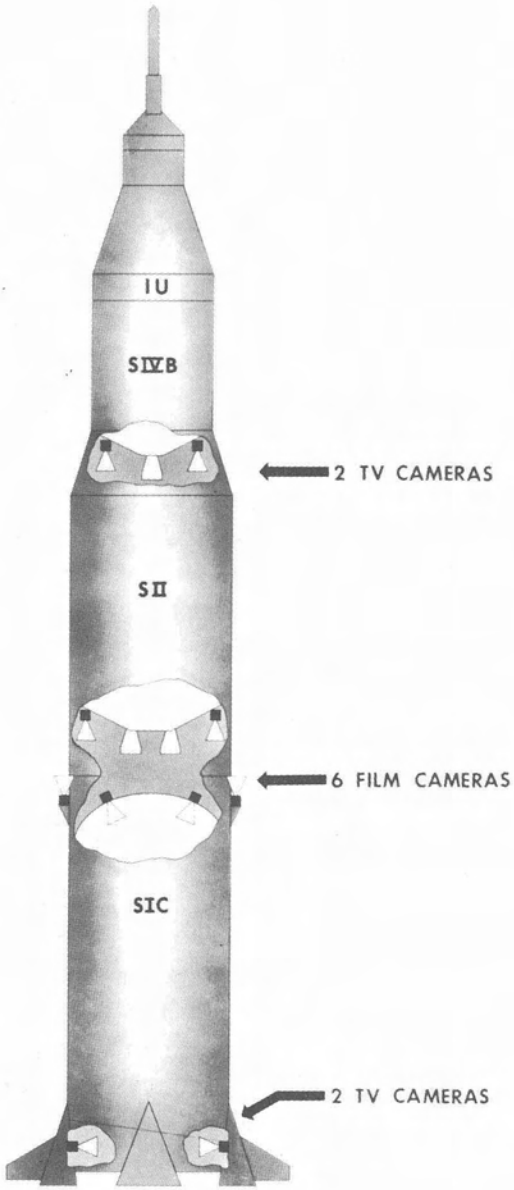

FIG 36

OPERATIONAL S-IC STAGE EQUIPMENT

	QUANTITY	TOTALS WEIGHT (Newtons)	TOTALS WEIGHT (pounds)	TOTALS POWER (watts)
TELEMETERS				
PAM/FM/FM (See note 1)	1	124.5	28	92
PCM/FM (See note 2)	1	262.4	59	165
Telemeter Antenna System (2 antennas)	1	122.3	27.5	--
Telemeter Calibrator Assembly	1	24.5	5.5	3
Remote Digital Sub-multiplexer	1	60.0	13.5	4.5
RANGE SAFETY COMMAND SYSTEM	2	173.5	39	36
Antenna System (2 antennas)	1	80.1	18	--
ODOP	1	89	20	40
Antenna System (3 antennas)	3	15.6	3.5	--
MEASUREMENTS (See note 3)	300	1894.8	426	600
TOTALS		2846.7	640	940.5

NOTES:

(1) Includes one FM/FM assembly, power amplifier and transmitter.

(2) Includes one model 270 multiplexer, one PCM/DDAS assembly, power amplifier and transmitter.

(3) Includes transducers and signal conditioners. Does not include mounting bracketry or electrical networks.

S-IC-507 MEASUREMENTS

Temperature	89
Pressure	62
Flow Rate	15
Position	1
Signals	97
Liquid Level	17
Voltage, Current & Frequency	11
Miscellaneous	3
RPM	5
TOTAL	300

FIGURE 37

OPERATIONAL S-II STAGE EQUIPMENT

	QUANTITY	TOTALS WEIGHT (Newtons)	TOTALS WEIGHT (pounds)	TOTALS POWER (watts)
TELEMETERS				
PAM/FM/FM (See note 1)	1	189.0	42.5	95
10 Channel Remote Sub-multiplexer	2	66.7	15	12
FM/FM (See note 2)	1	124.5	28	92
PCM/FM (See note 3)	1	262.4	59	165
Remote Digital Sub-multiplexer	2	120.1	27	9
TAPE RECORDER (See note 4)	1	35.6	8	28
TRACKING				
Mistram	1	73.4	16.5	140
Antenna System (2 antennas)	1	8.9	2	--
RANGE SAFETY COMMAND SYSTEM	2	173.5	39	36
Antenna System (4 antennas)	2	142.3	32	--
MEASUREMENTS (See note 5)	383	978.6	220	200
TOTALS		2175.1	489	777

NOTES:

(1) Includes one model 270 multiplexer, ~~one FM/FM assembly,~~ power amplifier and transmitter.

(2) Includes one FM/FM assembly, power amplifier and transmitter.

(3) Includes one model 270 multiplexer, one PCM/DDAS assembly, power amplifier and transmitter.

(4) Records 2 telemeters during separation sequence. Plays back after S-II/S-IVB separation.

(5) Includes transducers and signal conditioners. Does not include mounting bracketry or electrical networks.

S-II MEASUREMENT SUMMARY

Parameter	Stage	Engine	Total
Pressure	30	40	70
Temperature	35	45	80
Electrical Signals	50	100	150
Position	0	20	20
Voltage/Current	35	0	35
Flow Rate	0	10	10
RPM	0	10	10
Prop. Mass/Level	6	0	6
Acceleration	2	0	2
Totals	158	225	383

FIGURE 38

OPERATIONAL S-IVB STAGE EQUIPMENT

	QUANTITY	TOTALS WEIGHT (Newtons)	TOTALS WEIGHT (pounds)	TOTALS POWER (watts)
TELEMETERS				
FM/FM (See note 1)	1	124.5	28	92
PCM/FM (See note 2)	1	262.4	59	165
Telemeter Antenna System (2 antennas)	1	124.5	28	--
Telemeter Calibrator Assembly	1	24.5	5.5	3
RANGE SAFETY COMMAND SYSTEM	2	173.5	39	36
Antenna System (2 antennas)	1	97.4	22	--
MEASUREMENTS (See note 3)	180	556.0	125	300
TOTALS		1363.3	306.5	596

NOTES:

(1) Includes one FM/FM assembly, power amplifier and transmitter.

(2) Includes one model 270 multiplexer, one PCM/DDAS assembly, power amplifier and transmitter.

(3) Includes transducers and signal conditioners. Does not include mounting bracketry or electrical networks.

S-IVB-507 MEASUREMENTS

	STAGE
C - Temperature	35
D - Pressure	40
F - Flow	4
G - Position	9
K - Events	42
L - Liquid Level	6
M - Voltage, Current, Frequency	32
N - Miscellaneous	10
T - RPM	2
TOTAL	180

FIGURE 39

OPERATIONAL INSTRUMENT UNIT EQUIPMENT

	QUANTITY	TOTALS WEIGHT (Newtons)	TOTALS WEIGHT (pounds)	TOTALS POWER (watts)
TELEMETERS				
PAM/FM/FM (See note 1)	1	189.0	42.5	95
PCM/FM (See note 2)	1	262.4	59	165
Remote Digital Sub-multiplexer	1	62.3	14	4.5
Remote Digital Multiplexer	2	To Be Determined		
DDAS/Computer Interface	1	To Be Determined		
FM/FM (See note 3)	1	124.5	28	92
Telemeter Antenna System (2 antennas)	1	222.4	50	--
Telemeter Calibrator Assembly	1	24.5	5.5	3
Model 245 Multiplexer	1	55.6	12.5	14
TAPE RECORDER (See note 4)	1	To Be Determined		
TRACKING				
AZUSA	1	129.0	29	135
Antenna System (1 antenna)	1	4.4	1	--
C-BAND	1	13.3	3	25
Antenna System (1 antenna)	1	5.3	1.2	--
~~MINITRACK~~	1	8.9	2	.2
Antenna System (2 antennas)	1	44.5	10	--
COMMAND GUIDANCE SYSTEM	1	71.2	16	20
Antenna System (2 antennas)	1	48.9	11	--
RADAR ALTIMETER	1	111.2	25	70
Antenna System (1 antenna)	1	71.2	16	--
AROD				
Antenna System (3 antennas)	1	To Be Determined		
MEASUREMENTS (See note 5)	200	404.8	91	300
TOTALS		1853.5	416.7	923.7

NOTES:

(1) Includes one model 270 multiplexer, one FM/FM assembly, power amplifier and transmitter.

(2) Includes one model 270 multiplexer, one PCM/DDAS assembly, power amplifier and transmitter. UHF transmitter and antenna system may be added.

(3) Includes one FM/FM assembly and one power amplifier and transmitter.

(4) For orbital operation.

(5) Includes transducers and signal conditioners. Does not include mounting bracketry or electrical networks.

FIGURE 40

RF SYSTEMS - INSTRUMENT UNIT

	Antennas
AROD	3
AZUSA	1
C-BAND	1
MINITRACK	2
COMMAND GUIDANCE RECEIVER AND DECODER	2
RADAR ALTIMETER	1
THREE TELEMETERS (DF1, DF2, DP1)	2

MEASUREMENTS INSTRUMENT UNIT

Acceleration	2
Temperature	30
Pressure	18
Vibration	6
Flow Rate	1
Position	13
Guidance and Control*	45
RF and Telemetry	46
Signal	7
Voltage, Current and Frequency	12
Angular Velocity	27
TOTAL	207

*Output of Guidance Computer listed as one measurement; consists of 40 data bits.

FIGURE 40 (Continued)

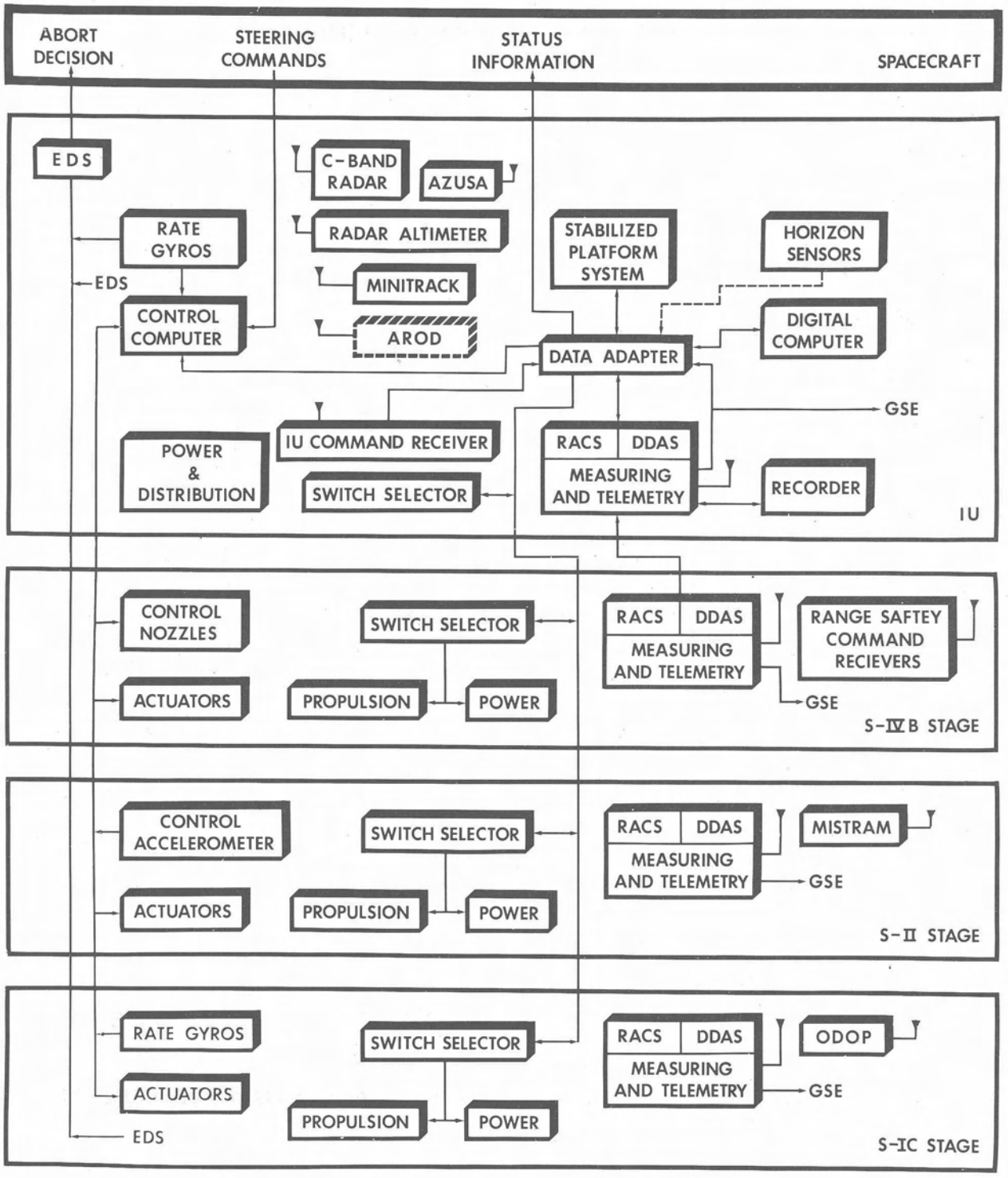

FIG. 41

SATURN V ASTRIONICS SYSTEM

were highly specialized for the particular vehicle, required large numbers of wires to the ground complex, and required large amounts of analog to digital conversion equipment on the ground. The scheme used in the Saturn is perfectly general, usable on any comparable or smaller vehicle. Very little equipment is built into the vehicle especially for the purposes of automatic checkout. Most of it would still be required; we are only using it in a particular way.

The digital data acquisition system is at the heart of the system, yet it is fairly conventional equipment organized so that it can talk to a small general purpose computer on the ground and to a guidance computer on board. Adding the RACS and the digital command system, the ground computer can now talk to the vehicle, and the loop is closed. Further, the same capability exists in flight as well as on the launch site.

Taken as small subsystems, nothing really revolutionary appears; but the system viewed as a whole has capabilities never before achieved in rocket instrumentation.

Suggestion. It is the opinion of this writer that the philosophies and techniques employed in the Saturn have application elsewhere. The supersonic transport aircraft under development in both the United States and Europe bear the same relation to previous aircraft as the Saturn bears to previous rockets. Both represent an order of magnitude increase in complexity and cost. These aircraft are also likely to be less tolerant of mistakes and failures, whether human or technical. The penalty for failure will be higher in terms of human life and money.

The number of dials, gauges, and warning lights in large aircraft surely is approaching the limit of human ability to efficiently and accurately absorb and interpret. It is suggested, then, that an automatic checkout capability similar to that in the Saturn be considered for these aircraft. The same (or additional) data now presented in the myriad dials and gauges could be telemetered to a small general purpose computer in the airport facility, where the data could be assimilated far more rapidly, and with less error, than by the most skilled aircraft crew. If desired, a small onboard computer, analogous to our guidance computer, could perform stored subroutines for particular subsystems, reducing the amount of data which needs to be telemetered. In either case, the end result might be a single "go" light to the pilot.

It should be clearly understood that it is not suggested that the aircraft crew be removed from the loop. They could in fact have complete control

of the checkout sequence, each subroutine proceeding only after they are satisfied with the result of the previous one. On the contrary, it is felt that the full "manual" capability should be retained. Any piece of equipment can fail, and the crew should be able to take off and fly the craft without any "automatic" ground or airborne equipment.

It may be felt that this is unnecessarily making aircraft more and more dependent on outside facilities beyond the ken of the crew. It is felt that the proposal made here is less such a step than the present ground controlled approach, where the crew is completely under the control of, and dependent on, other persons.

The cost would be on the order of one-half million dollars per aircraft plus about one million dollars in ground equipment at each airport served by the aircraft. This is not insignificant and might indeed affect the competitive position of an aircraft builder or airline in a close situation. It is felt however that the proposal, if implemented, could be turned into a competitive advantage with the proper presentation to the public. Besides, if we can afford a computer to handle reservations, surely we can afford another to increase the probability of a safe flight.

Acknowledgments

Much of the material in this paper was obtained from internal publications of the George C. Marshall Space Flight Center, National Aeronautics and Space Administration. The author is grateful to the many persons who assisted in the preparation of text and illustrations, particularly Miss Barbara Armor and Mr. Eric Ferguson.

Opinions expressed in this paper are those of the author, and do not necessarily represent the views of the National Aeronautics and Space Administration.